Water Quality

Focus Area
Nutrients and Bacterial Wastes

Published by University Extension, University of Missouri-System

Dead poultry composter project

Bill Harvill Composter

Charles Fulhage, Agricultural Engineer, University Extension

A grant of EPA funds was made available by the Missouri Department of Natural Resources in October 1990 to selected southwest Missouri poultry producers representing each of the five major poultry processing companies. The purpose of the grant is to demonstrate the feasibility of composting dead birds in an environmentally sound manner. The grant is administered by Southwest Missouri Resource Conservation and Development, Inc., with technical assistance provided by the Soil Conservation Service and educational activities provided by University of Missouri Cooperative Extension.

Bill Harvill, of Stark City, MO, representing Tyson Foods, agreed to participate in the demonstration project. Harvill's concerns about environmental considerations, economics of managing dead birds and future regulations pertaining to dead bird disposal were factors in his decision to participate in the demonstration project. This guidesheet describes the composting project relating to Harvill's poultry operation.

Production facilities

The Harvill broiler operation consists of five buildings in which 6 flocks per year are grown to a market weight of 4 pounds. Table 1 outlines the characteristics of each building.

An aerial view of the building layout with com-

Table 1.
Building Type and Bird Capacity in the Harvill Operation

Building type	Number of birds	Weight in (lbs.)	Weight out (lbs.)	Time in bldgs (days)
growout	21,300	0	4	45

The Harvill composter serves five broiler buildings with a capacity of 21,300 birds each.

Printed with soy ink on recycled paper

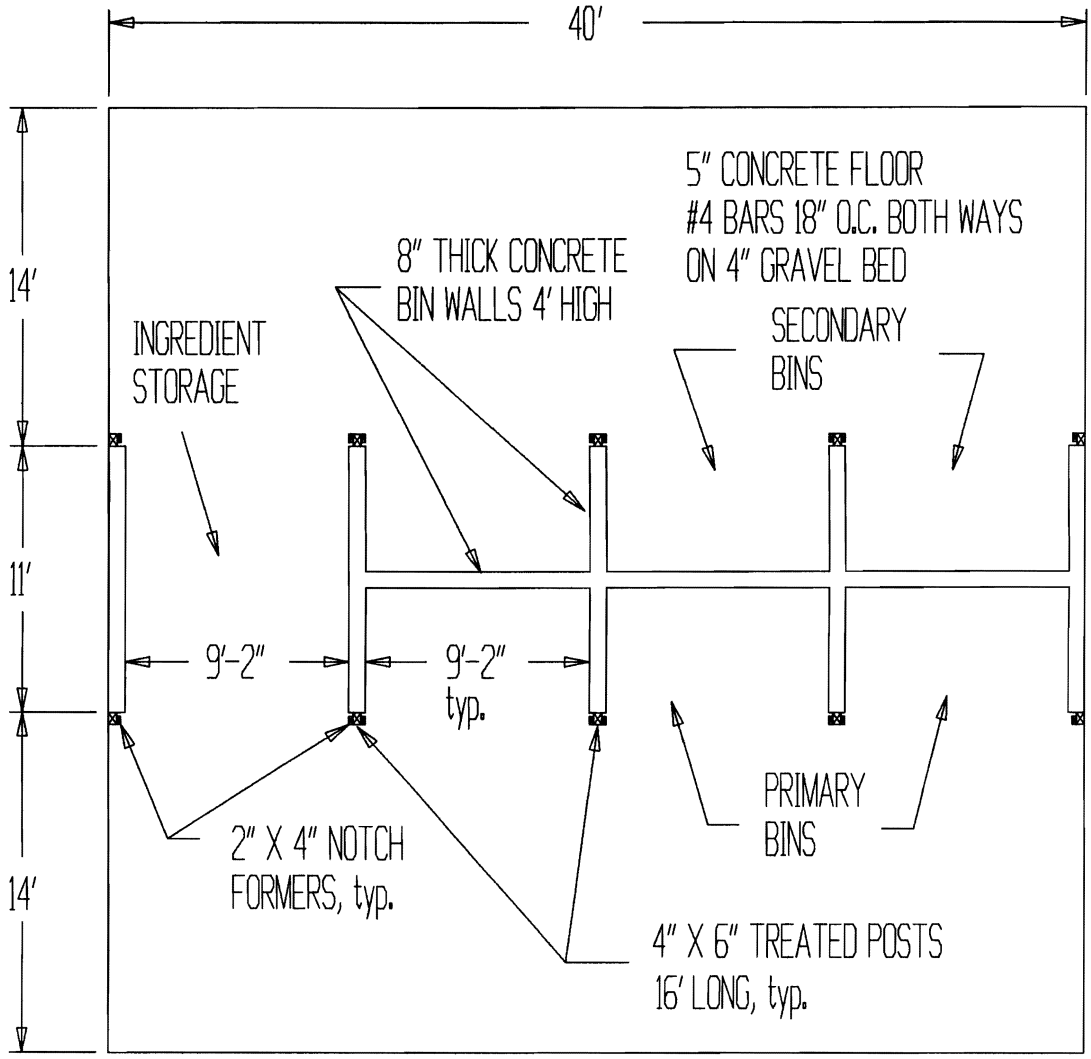

Figure 1. Plan view of the Harvill composter

poster for the Harvill production facilities is shown. Average mortality rate in these facilities is about 4 percent, with peak rates at 8 percent.

Composter

The Harvill composter is different from the other composters in the project in that concrete is used in the composter bin walls rather than treated wood. This alternative was selected to compare the relative durability of treated wood and concrete in this application. This composter uses an "umbrella" type construction, with bins open on either side. Holes formed with 3" PVC pipe are provided in the bin walls to allow air movement.

Primary and secondary bins are 9 feet wide by 5 feet long by 4 feet high, with a capacity of 180 cubic feet in each bin. There are three primary bins and three secondary bins in the composter. See Figure 1. Primary and secondary bins are accessed from either side of the composter, with a concrete slab work area in front of the bins on either side. A 9 foot by 11 foot area at one end of the composter provides storage for litter and straw.

The composter building is pole-type construction with an "umbrella" configuration. See Figure 2. The roof of the composter provides a 5 foot overhang on either side to provide partial coverage of th4e concrete working area in front of the bins. The ends of the composter building above the bin walls are enclosed with corrugated metal for rain protection.

Operational characteristics

Harvill estimates 30-45 minutes per day are spent layering dead birds and ingredients in the composter. He uses a tractor with an 8 foot wide bucket on a front-end transfer and load finished compost. Table 2

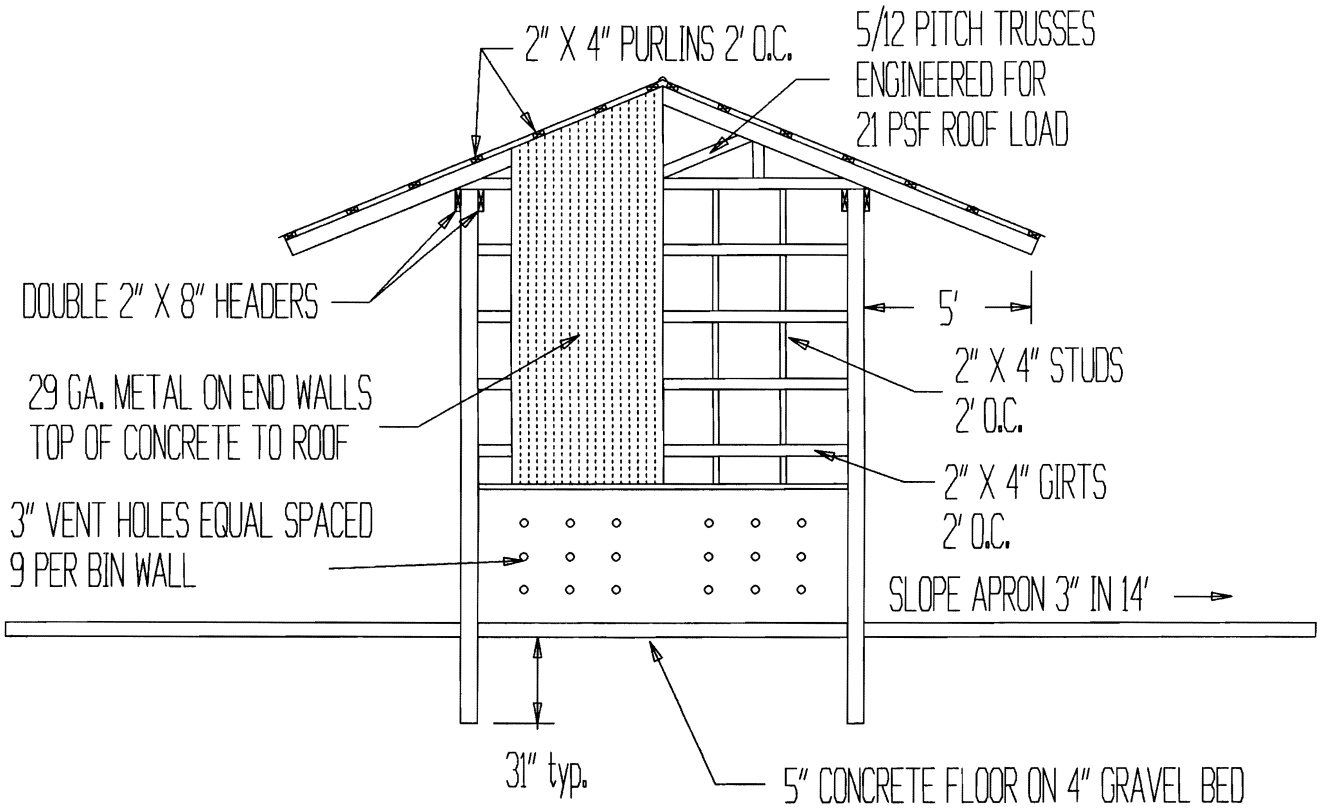

Figure 2. Cross section of the Harvill composter

"Umbrella" type construction allows access to composting bins from either side of the Harvill composter.

shows a laboratory analysis of the finished compost fertilizer value from the Harvill composter.

Table 2.
Analyses of litter and finished compost in the Harvill operation

Fertilzer nutrient	Litter	Finished compost
Dry matter, %	67.5	67.9
Nitrogen, lb/ton	13.5	18.9
Crude protein, %	43.2	60.4
P_2O_5, lbs/ton	58.6	67.7
K_2O, lbs/ton	37.7	28.1

Cost

Composter costs depend upon many factors such as site characteristics, composter design, size, etc. Table 3 shows costs incurred for the Harvill composter as constructed in June 1991.

Table 3.
Cost associated with the Harvill composter (June 1991)

Item	Cost ($)
materials	5,430
labor	1,000
total	6,430

Air enters the compost bins through holes in the compost bin walls.

This guide published with funds provided to the Missouri Department of Natural Resources from the Environmental Protection Agency, Region VII. To learn more about water quality and other natural resources, contact the Missouri Department of Natural Resources, P.O. Box 176, Jefferson City, MO 65102. Toll free 1-800-334-7046.

University Extension
UNIVERSITY OF MISSOURI
COLUMBIA

■ Issued in furtherance of Cooperative Extension Work Acts of May 8 and June 30, 1914 in cooperation with the United States Department of Agriculture. Ronald C. Powers, Interim Director, Cooperative Extension Service, University of Missouri and Lincoln University, Columbia, Missouri 65211. ■ An equal opportunity institution.