Water Quality

Focus Area
Nutrients & Bacterial Waste

Published by University Extension, University of Missouri-System

Roof Gutters for Dairy Barns

Charles Fulhage and Donald Pfost, Extension Agricultural Engineers, University of Missouri

Archive version - See extension.missouri.edu

Roof gutters may be needed with livestock facilities to divert clean water from contaminated lot runoff and minimize the total quantity of waste effluent requiring proper disposal.

Clean-water runoff

It is estimated that the annual runoff from a 92-foot by 200-foot barn roof near Springfield, Mo., will average about 470,000 gallons. If allowed to be polluted by manure, this nearly one-half million gallons of previously clean water must be disposed of on land without producing runoff.

Uncontaminated roof water can be discharged into the waters of the state or stored for farm use, such as watering livestock. Frequently, dairy barns present special problems due to their huge roof areas, which require large gutters and downspout capacity.

Positioning gutters to reduce snow and ice slide failures may be a major consideration. If the building eave-line has a 2-percent to 3-percent slope, as is common on gutter-flushed buildings, gutter capacity is increased compared to gutters mounted nearly level. Most gutters are mounted level for appearance, but a slope of 1/16 inch per foot is desirable for drainage.

An alternative to roof gutters for buildings with at least a 12-inch overhang and where an open channel will not be polluted is a surfaced channel or a stone-lined, tile-drained ditch alongside of the building. Also, an open channel could conduct water from a small gutter with multiple downspouts.

General information

In typical construction, downspouts are spaced from 20 feet to 50 feet with a 60-foot maximum. The final routing of the roof water may determine whether a small gutter with many downspouts will be more feasible than a large gutter with few downspouts. House-sized gutters are readily available. But in many rural locations, specially formed gutters may be quite expensive. Gutter hangers are normally spaced 3 feet on center (o.c.), but 1.5 feet o.c. is recommended where ice and snow are long-lasting.

In an environment with broad temperature changes, the gutters need to move without being restrained by the hangers. An alternative is to build the gutter with shorter lengths, allowing a space between sections for expansion. Table 1 shows the thermal expansion/contraction of a 100-foot length of gutter with 100 degrees of temperature change.

Metal	Coefficient of expansion	Total movement
Aluminum	0.0000128	1.54 inch
Copper	0.0000093	1.12 inch
Galvanized steel	0.0000065	0.78 inch

Table 1. Coefficient of expansion and expansion/contraction of 100 feet of gutter with 100 degrees of temperature change.

Examples

This publication will work example problems to illustrate the use of roof gutters.

Example 1. Level gutters

Design a gutter/downspout system for a 92-foot by 200-foot free-stall barn located near Boonville, Mo., with a 4:12 gable roof. Assume a level rectangular gutter with a depth to width ratio of 0.75.

On the 200-foot-long roof, assume four downspouts. Use the factor of 1.05 from Table 2 (page 2) to adjust the roof plan-area for the 4:12 roof pitch.

Use Figure 1 (page 2) to find the width of gutter for 50-foot lengths of gutter. Use the rainfall intensity value of 7.2 inches per hour for Boonville from Figure 2 (page 2). For a segment of roof 46 feet wide by 50 feet long, the adjusted "IA" value will be: IA = 46 feet x 50 feet x 1.05 x 7.2 = 17,388. From Figure 1 (page 2), for a depth/width ratio of 0.75, the required gutter

Printed with soy ink on recycled paper

Roof Pitch*	Factor
Level to 3 inches per foot	1.00
4 inches to 5 inches per foot	1.05
6 inches to 8 inches per foot	1.10
9 inches to 11 inches per foot	1.20
12 inches per foot	1.30

*When the roof is sloped, neither the plan area nor the actual roof area should be used in sizing drainage.

Table 2. Design-area adjustment factor for pitched roofs. Multiply the plan area of the roof by the adjustment factor corresponding to the roof pitch.

width is 7.5 inches. Select a rectangular gutter 8 inches wide by 6 inches deep.

Example 2. Sloped gutters

Assume the foundation, eave height and gutter for the free-stall barn are sloped at 2 percent for flushing the alleys. To determine the width of a rectangular gutter, see Table 3. Refer to Table 4 to determine the diameter of a semi-circular gutter to carry runoff from a 50-foot long portion of the building.

First, determine the roof runoff:

$$\text{Runoff rate} = \frac{46 \text{ feet x } 50 \text{ feet x } 1.05^{*} \text{ x } 7.2 \text{ inches per hour}}{12 \text{ inches per foot x } 3{,}600 \text{ seconds per hour}} = 0.40 \text{ cfs}$$

*Roof area adjustment factor for 4:12 roof slope.

Select a gutter with at least 0.40 cfs capacity at 2 percent slope. From Table 3, select a rectangular gutter 5 inches wide (depth = 0.75 times width = 3.75 inches). Select a semicircular gutter 6 inches in diameter, see Table 4.

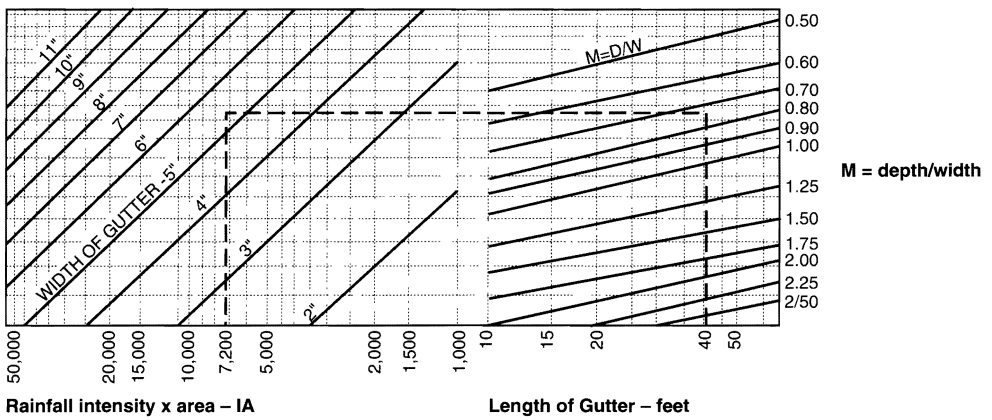

Figure 1. Width of level rectangular gutters for given roof areas and rainfall intensities.

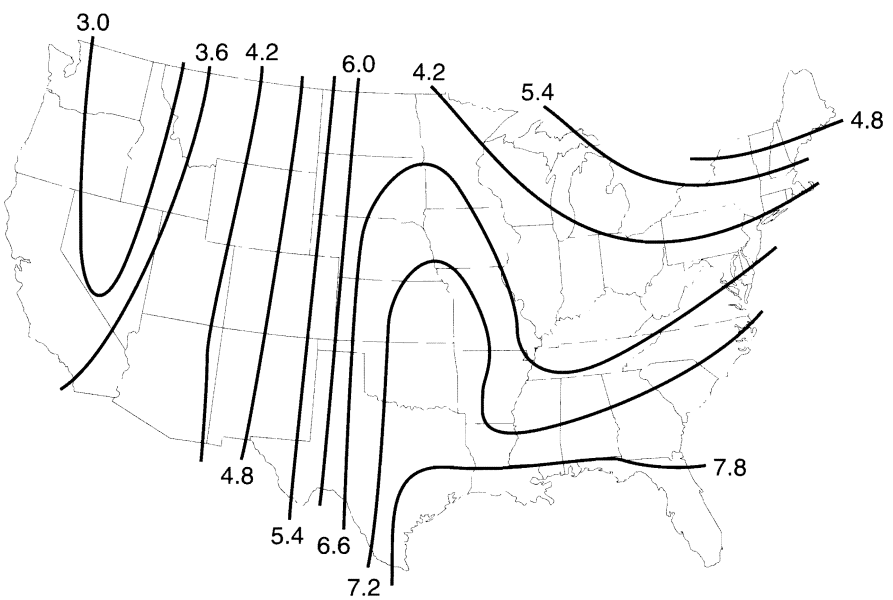

Figure 2. Map shows rainfall intensity in inches per hour for 5-minute periods to be expected once in 10 years. Normally, this is adequate for design, but storms have been twice as intense in some areas. See local records for more accurate data.

Gutter width (inches)	Gutter slope (percent) 0.5	1	2	3	4
	Capacity, cfs				
4	0.16	0.22	0.31	0.38	0.44
5	0.28	0.40	0.57	0.70	0.80
6	0.46	0.65	0.92	1.13	1.31
7	0.70	0.98	1.29	1.70	1.97
8	1.00	1.41	1.99	2.44	2.82
9	1.36	1.93	2.72	3.34	3.85
10	1.80	2.55	3.61	4.42	5.11
12	2.94	4.16	5.88	7.20	8.31

Table 3. Capacity for rectangular roof gutters. Depth of gutter = 0.75 times width. (See Manning's formula on page 8.)

Gutter diameter (inches)	Gutter sloper (percent) 0.5	1	2	3	4
	Capacity, cfs				
4	0.07	0.10	0.14	0.17	0.20
5	0.13	0.18	0.25	0.31	0.36
6	0.20	0.29	0.41	0.50	0.58
8	0.44	0.62	0.88	1.08	1.24
10	0.80	1.13	1.60	1.96	2.26
12	1.30	1.84	2.60	3.18	3.67

Table 4. Capacity for smooth semi-circular gutters, such as PVC, at various slopes. (See Manning's formula on page 8.)

Example 3. Sizing downspouts

Select an adequate downspout to accommodate 0.40 cfs flow with 3.75-inch head from the rectangular gutter in Example 2.

In Table 5, we find that with a 3.75-inch head, a 6-inch diameter downspout will be required. Because the gutter is only 5 inches wide, a rectangular 5-inch by 6-inch transition may be used to connect the 6-inch round downspout to the 5-inch gutter.

An alternative would be to increase the head above the 6-inch downspout by means of a drop box.

Downspout capacity

Downspout capacity can be increased by using a tapered transition to enlarge the downspout entrance in the bottom of the gutter, thus increasing the inlet area. Or you may add a a dropbox at each downspout location to increase the head of water above the downspout entrance. See Table 5 for the capacity of various downspout diameter sizes at various heads.

A rule of thumb for sizing the tapered inlet or drop-box inlet is for the cross-sectional (horizontal) area to be at least 1.5 times the downspout cross-sectional area and the vertical drop from the gutter to the downspout entrance to be at least twice the downspout diameter.

Using the 0.40 cfs downspout capacity needed for the 50-foot sloped gutter in Example 2, determine the total head necessary to cause 0.40 cfs to enter a 4-inch diameter downspout.

From Table 5, by interpolation, we find that 11 inches of head will cause 0.40 cfs to enter the 4-inch downspout.

Using the rules of thumb above, we would select an 11-inch deep dropbox (or a tapered transition) with a horizontal area of at least 18.85 square inches. See the following formula:

$$\text{Required area} = 1.5 \times 2^2 \pi = 1.5 \times 12.56 = 18.85 \text{ square inches}$$

Head (inches)	Downspout diameter (inches) 3	4	5	6	7	8
	Capacity, cfs					
2	0.10	0.17	0.27	0.39	0.53	0.69
4	0.14	0.24	0.38	0.55	0.74	0.97
6	0.17	0.30	0.46	0.67	0.91	1.19
8	0.19	0.34	0.54	0.77	1.05	1.37
10	0.22	0.38	0.60	0.86	1.17	1.53
12	0.24	0.42	0.66	0.95	1.39	1.82
14	0.26	0.45	0.71	1.02	1.39	1.82
16	0.27	0.49	0.76	1.09	1.49	1.94
18	0.29	0.51	0.80	1.16	1.58	2.06
20	0.31	0.54	0.85	1.22	1.66	2.17
22	0.32	0.57	0.89	1.28	1.74	2.28
24	0.33	0.59	0.93	1.34	1.82	2.38

Table 5. Capacity of circular downspouts based on orifice flow. (See orifice flow formula on page 8.)

Clearance for snow and ice slides

Clearance for snow and ice slides should be taken into account in positioning the gutters. In general, the flatter the roof pitch, the greater the clearance required. Use Figure 3 as a guide in positioning gutters for the snow and ice clearance.

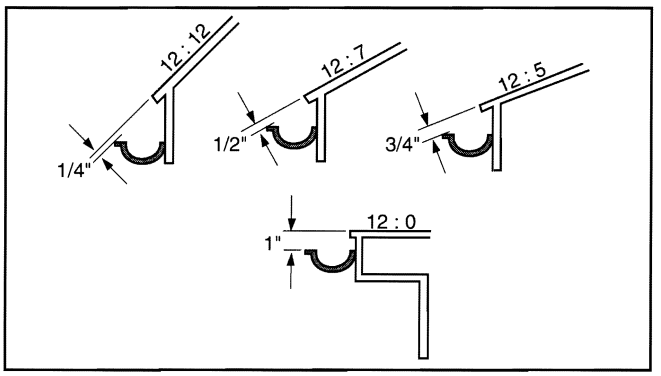

Figure 3. Properly position gutters. Snow and ice can slide off the roof clear of the gutter. Steeper pitch roofs require less clearance.

Standard downspouts

Table 6 provides data for selecting sizes for various shapes of standard downspouts, based on cross-sectional area.

Type	Area square (inches)	Nominal size (inches)	Actual size diameter (inches)
	7.07	3	3
Plain	12.57	4	4
Round	19.63	5	5
	28.27	6	6
	5.94	3	3
Corrugated	11.04	4	4
Round	17.72	5	5
	25.97	6	6
			(depth x width)
	3.80	2	1¾ x 2¼
Corrugated	7.73	3	2⅝ x 3¼
Rectangular	11.70	4	2¾ x 4¼
	18.75	5	3¾ x 5
	3.94	2	1¾ x 2¼
Plain	6.00	3	2 x 3
Rectangular	12.00	4	3 x 4
	20.00	5	3¾ x 4¾
	24.00	6	4 x 6

Table 6. Standard downspout sizes.

Discharging water onto erodible soil/sod

For small downspouts discharging water onto erosion-resistant surfaces, spreader/splash pans may be used (see Figure 4).

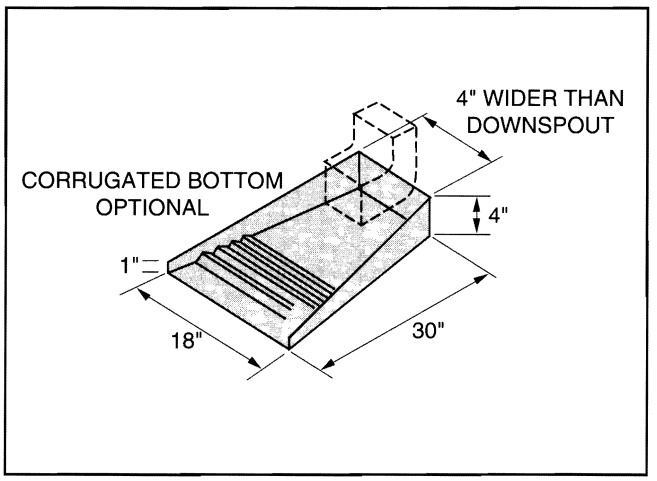

Figure 4. Spreader/splash pan for discharging downspouts onto erosion-resistant surfaces.

Discharging large downspouts or conduits receiving water from several downspouts onto soil may require special treatment to prevent erosion or to eliminate a plunge pool.

Typically, discharges from large gutters may be routed via an underground or overland pipe to a stable channel or via a surface channel to a grass waterway or a rock-lined channel. Table 7 gives suggested permissible discharge velocities to use if more specific values are not available for bare and vegetated waterways. Table 8 (page 6) contains data for flow in trapezoidal channels with recommended 4:1 side slopes.

Some means of spreading the discharging water uniformly over a wide vegetated waterway is required. A suggested method is to use a gated discharge pipe in a concrete basin across the width of the flat bottom of a trapezoidal waterway (see Figure 5). Data for selected gated discharge pipes are tabulated in Table 9.

Other types of energy-dissipating structures are shown in *Soil and Water Conservation Engineering* (see References). One alternative is discharging water into a bed of large rocks to dissipate the energy and spread the flow.

For more information on the design of grassy waterways, consult your local SCS office or your extension regional agricultural engineering specialist (you may get that person's name at your local University Extension center).

4. Waterway and distribution system

Select a waterway and distribution system to

	More erodible soils*			Less erodible soils**		
	Percent slope			Percent slope		
	0-5	6-10	more than 10	0-5	6-10	more than 10
Cover			(velocity, feet per second)			
None						
Cultivated	1.5	NR	NR	2.5	NR	NR
Not cultivated	2.0	NR	NR	2.5	NR	NR
Annual grasses and legumes						
Sparse stand	2.5	NR	NR	3.0	NR	NR
Good stand	3.0	NR	NR	3.5	NR	NR
Average-density grasses (blue grass, fescue and brome)						
Fair stand	3.0	2.5	***	4.0	3.0	2.5
Good stand	4.0	3.5	3.0	5.0	4.0	3.5
Excellent stand	5.0	4.5	4.0	6.0	5.0	4.5
Dense sod grasses (Bermuda)						
Excellent stand	6.0	5.0	4.0	7.0	6.0	5.0

*More erodible soils generally have a high content of fine sand or silt and lower plasticity. Typical soil textures are fine sand, silt, sandy loam and silty loam.

**Less erodible soils generally have a higher clay content and higher plasticity. Typical soil textures are silty clay, sandy clay and clay.

***Must have good quality vegetation on these slopes.

NR - Not recommended.

Table 7. Maximum permissible water velocities to prevent erosion in grassy waterways.

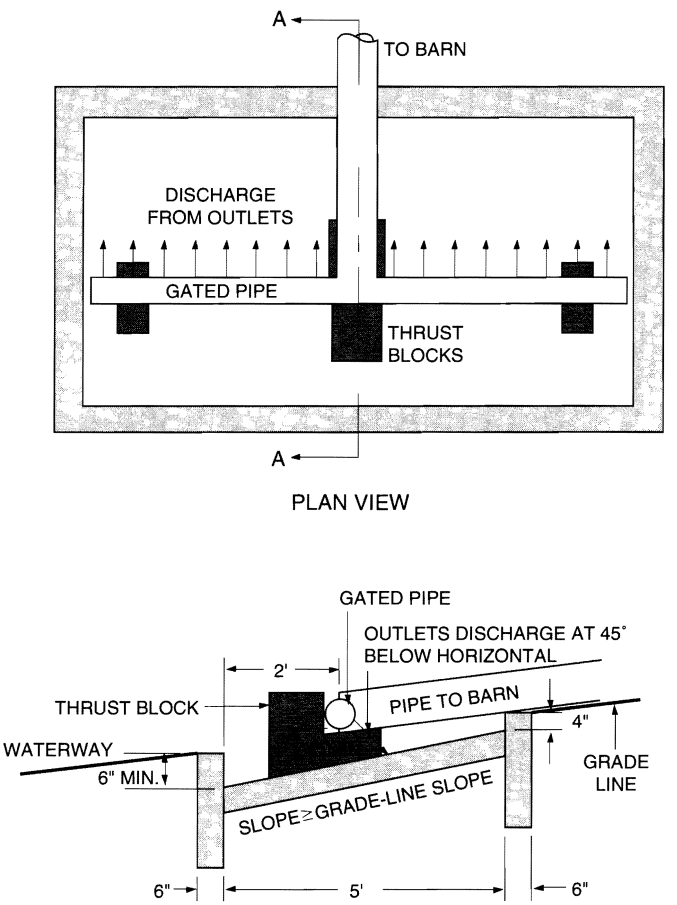

Figure 5. Schematic drawing of gated pipe in a concrete distribution basin discharging into a trapezoidal waterway.

Slope/velocity*	2.0	4.0	6.0	8.0	10.0	12.0	14.0
	Channel width (feet)						
	Channel capacity in cfs/channel depth (feet)						
1/2	1.3/0.2	1.8/0.2	2.3/0.2	2.9/0.2	3.6/0.2	4.3/0.2	5/0.2
1/3	28/1.3	30/1.1	32/1	36/1	40/0.9	42/0.9	48/0.9
1/4	88/2.1	88/1.9	91/1.8	96/1.6	106/1.6	107/1.5	121/1.5
1/5	211/3.0	214/2.8	212/2.6	226/2.5	237/2.4	245/2.3	251/2.2
3/2	.37/0.1	0.64/0.1	0.95/0.1	1.3/0.1	1.6/0.1	1.7/0.1	2/0.1
3/3	5.6/0.5	7.2/0.4	8.9/0.4	10/0.4	13/0.4	14/0.3	16/0.3
3/4	16/0.8	19/0.7	22/0.6	25/0.6	28/0.6	33/0.6	36/0.6
3/5	41/1.2	43/1	47/1	52/0.9	57/0.9	64/0.8	71/0.8
5/2	0.25/0.1	0.42/0.1	0.62/0.1	0.83/0.1	1/0.1	1.2/0.1	1.4/0.1
5/3	2.9/0.3	3.9/0.3	5.2/0.3	6.4/0.2	8/0.2	8.8/0.2	10/0.2
5/4	8.5/0.5	10/0.4	13/0.4	16/0.4	17/0.4	20/0.4	23/0.4
5/5	20/0.8	22/0.7	25/0.6	29/0.6	33/0.6	38/0.5	44/0.5
8/2	0.15/0.03	0.29/0.03	0.43/0.03	0.58/0.03	0.72/0.03	0.78/0.03	0.91/0.03
8/3	1.7/0.2	2.6/0.2	3.3/0.2	4.3/0.2	5.1/0.2	6/0.2	7/0.2
8/4	4.6/0.3	6/0.3	7.6/0.3	9.3/0.3	12/0.3	13/0.3	15/0.3
8/5	10/0.5	13/0.4	15/0.4	18/0.4	21/0.4	25/0.4	28/0.4
10/2	0.13/0.03	0.25/0.03	0.37/0.03	0.5/0.03	0.62/0.03	0.74/0.03	0.87/0.03
10/3	1.3/0.2	2/0.1	2.8/0.1	3.6/0.1	4.3/0.1	5.1/0.1	6/0.1
10/4	3.3/0.3	4.8/0.2	6.4/0.2	7.8/0.2	9.3/0.2	11/0.2	12/0.2
10/5	7.5/0.4	9.4/0.3	12/3	15/0.3	17/0.3	20/0.3	23/0.3

*Slope in percent/velocity in feet per second.

Table 8. Maximum channel capacity and flow depth (for a trapezoidal channel with 4:1 side slopes) for various values of channel width, slope and "n," using Manning's formula with selected slopes and allowable velocities from Table 7. (See Manning's formula on page 8.)

receive the roof discharge from a 92-foot by 200-foot barn with 4:12 roof slope. Determine the roof runoff

$$\text{Runoff} = \frac{92 \text{ foot x } 200 \text{ foot x } 1.05 \text{ x } 7.2 \text{ inches per hour}}{12 \text{ inches per foot x } 3{,}600 \text{ seconds per hour}} = 3.22 \text{ cfs}$$

(as shown previously):

Select the bottom width for a trapezoidal waterway on an 8-percent slope with a good stand of fescue. Table 7 shows the allowable waterway velocity is 3.5 foot per second. From Table 8, we see that a 4-foot-wide waterway will carry 2.6 cfs on an 8-percent slope at a velocity of 3 feet per second and 6 cfs at 4 feet per second on an 8-percent slope. By straight-line interpolation, the capacity of a 4-foot waterway at 3.5 feet per second would be a 4.3 cfs, adequate for the 3.22 cfs roof runoff. Note that the bottom width of a trapezoidal waterway channel may be chosen based on the width of equipment used for construction or for mowing and removing the grass instead of the minimum width necessary to achieve a non-erodible velocity.

Use Table 9 to select a distribution system with a 4-foot width and capacity of 3.22 cfs. A 4-foot distribution system with 5-inch diameter pipe, 12 holes that are 2 inches in diameter and 5.2 feet of head will result in a 3.2 cfs flow rate — just adequate for the

Slope (percent)	4	5	6	8	10	12
	Pipe diameter (inches)					
	Capacity (cfs)					
0.5	0.12	0.22	0.36	0.78	1.41	2.29
1	0.17	0.31	0.51	1.10	1.99	3.24
2	0.24	0.44	0.72	1.56	2.82	4.59
3	0.30	0.54	0.88	1.90	3.45	5.62
4	0.35	0.63	1.02	2.20	3.99	6.48
5	0.39	0.70	1.14	2.46	4.46	7.25
6	0.42	0.77	1.25	2.69	4.88	7.94
8	0.49	0.89	1.44	3.11	5.64	9.17
10	0.55	0.99	1.62	3.48	6.31	10.26
12	0.60	1.09	1.77	3.81	6.91	11.23
14	0.65	1.18	1.91	4.12	7.46	12.13
16	0.69	1.26	2.04	4.40	7.98	12.97

Table 10. Gravity flow for smooth pipes, such as PVC, at various slopes. (See Manning's formula on page 8.)

Pipe diameter (inches)	Outlet diameter (inches)	Outlet flow rate (GPM)	Outlet flow variation (percent)	Number outlets	Total flow (CFS/GPM)	Head required (feet)
			For 2-foot distribution pipe			
2	0.563	10	1	6	0.13/60	7.1
2	1.00	30	6	6	0.40/180	5.8
2	1.31	50	19	6	0.67/3,600	4.1
3	1.56	70	7	6	0.93/420	5.1
4	1.88	100	5	6	1.33/600	5.3
4	2.00	120	6	6	1.6/720	5.8
4	2.25	150	10	6	2/900	5.2
5	2.50	200	6	6	2.67/1,200	6.5
5	3.00	250	13	6	3.33/1,500	4.2
6	3.25	300	9	6	4/1,800	4.9
			For 4-foot distribution pipe			
2	0.563	10	3	12	0.27/120	6.8
3	1.06	30	8	12	0.8/360	4.4
3	1.31	50	21	12	1.33/600	4.3
4	1.56	70	13	12	1.87/840	4.8
4	1.88	100	29	12	2.67/1,200	3.7
5	2.00	120	14	12	3.2/1,440	5.2
5	2.25	150	24	12	4/1,800	4.3
6	2.50	200	17	12	5.3/2,400	5.7
6	2.75	250	27	12	6.7/3,000	5.2
7	3.00	300	19	12	8/3,600	5.9
			For 6-foot distribution pipe			
2	0.563	10	7	18	0.4/180	6.5
3	1.00	30	16	18	1.2/540	5.1
4	1.31	50	15	18	2/900	4.8
4	1.56	70	35	18	2.8/1,260	3.6
6	1.88	100	13	18	4/1,800	4.8
6	2.00	120	17	18	4.8/2,160	5.1
6	2.25	150	29	18	6/2,700	4.2
8	2.62	200	16	18	8/3,600	4.8
8	2.943	250	27	18	10/4,500	4.1
8	3.00	300	30	18	12/5,400	5.3
			For 8-foot distribution pipe			
2	0.563	10	13	24	0.53/240	6.0
4	1.00	30	9	24	1.6/720	5.7
4	1.31	50	31	24	2.67/1,200	4.0
6	1.56	70	11	24	3.7/1,680	5.1
6	1.88	100	25	24	5.33/2,400	4.2
8	2.06	120	11	24	6.4/2,880	4.9
8	2.25	150	16	24	8/3,600	5.1
8	2.62	200	33	24	10.7/4,800	3.9
10	2.94	250	19	24	13.3/6,000	4.6
10	3.25	300	32	24	16/7,200	3.8
			For 10-foot distribution pipe			
2	0.563	10	22	30	0.67/300	5.4
4	1.00	30	15	30	2/900	5.3
6	1.31	50	9	30	3.33/1,500	5.4
6	1.56	70	18	30	4.67/2,100	4.6
8	1.88	100	12	30	6.67/3,000	4.9
8	2.06	120	18	30	8/3,600	4.5
8	2.25	150	27	30	10/4,500	4.4
10	2.62	200	20	30	13.3/6,000	4.7
12	2.94	250	15	30	16.7/7,500	4.9
12	3.25	300	23	30	20/9,000	4.3
			For 12-foot distribution pipe			
3	0.625	10	9	36	0.80/360	4.1
4	1.00	30	23	36	2.4/1,080	4.7
6	1.31	50	13	36	4/1,800	5.1
6	1.56	70	28	36	5.6/2,520	4.1
8	1.88	100	18	36	8/3,600	4.6
8	2.00	120	24	36	9.6/4,320	4.8
10	2.25	150	15	36	12/5,400	5.2
10	2.62	200	31	36	16/7,200	4.1
12	2.94	250	22	36	20/9,000	4.5
12	3.25	300	36	36	24/10,800	3.7
			For 14-foot distribution pipe			
3	0.613	10	12	42	0.93/420	4.3
4	1.00	30	32	42	2.8/1,260	4.4
6	1.31	50	18	42	4.67/2,100	4.8
6	1.44	70	28	42	6.53/2,940	5.8
8	1.88	100	25	42	9.33/4,200	4.2
8	2.00	120	35	42	11.2/5,040	4.2
10	2.25	150	22	42	14/6,300	4.7
12	2.56	200	17	42	18.7/8,400	5.3
12	2.94	250	32	42	23.3/10,500	4.0
12	3.00	300	36	42	28/12,600	5.1

*Pipe diameter is based on distribution pipe being center-fed. If pipe is end-fed, pipe size will need to be increased substantially.

Table 9. Discharge data for gated distribution pipe.

maximum flow.

If the slope from the barn to the distribution pipe is also 8 percent, from Table 10 we find that a 4-inch PVC pipe will be adequate for conveying the 3.22 cfs flow from the barn to the gated distribution pipe. However, to have a residual head of at least 5.2 feet at a gated distribution pipe (as opposed to an open discharge pipe, as in Table 10), the pressure drop through the conduit from the barn should be investigated and the conduit should be sized to provide adequate pressure at the distribution point.

For more information on the design of gated-pipe systems, consult your local SCS area engineer or your extension regional agricultural engineering specialist. You may get that person's name from your local SCS office or University Extension center). The engineers have a computer program available for design of gated-pipe systems.

Pipes to carry water from downspouts

Downspouts can be discharged into a pipe suspended on the side of the building at some design slope, laid on the ground alongside the building or buried underground at the design slope. Use Table 10 to select the pipe size based on the required capacity and the pipe slope. The capacities are based on water flowing in the pipe at a depth equal to 70 percent of the inside pipe diameter.

Formulas for Tables 3, 4, 5, 8 and 10:

Table 3: Capacity for rectangular roof gutters. Depth of gutter = 0.75 x width. Capacities calculated using Manning's formula for open channel flow: $Q = 1.486 \times S^{0.5} \times A^{1.667} \div (n \times P^{0.667})$ with n = 0.012 for smooth metal, smooth concrete or planed lumber and P = wetted perimeter in feet.

Table 4: Capacity for smooth semicircular gutters, such as PVC, at various slopes. Capacities calculated using Manning's formula for open channel flow: $Q = 1.486 \times S^{0.05} \times A^{1.667} \div (n \times P^{0.0667})$ with n = 0.010 and P = wetted perimeter in feet (flow depth = 50 percent of diameter).

Table 5: Use the orifice coefficient of 0.6 in the following formula: $Q = CA\,(2gh)^{0.5} = 0.6A(64.4h)^{0.5}$ where A = cross-sectional area of downspout in square feet and h = head in feet.

Table 8: Manning's formula for an open channel: $V = (1.49/n)\,R^{0.667}s^{0.5}$ where V = velocity in fps. R = the hydraulic radius in feet and s = the hydraulic gradient in feet per foot. In this table, velocity = 2 feet per second for nonvegetative, uncultivated waterways (n = 0.022) and velocities for vegetated waterways = 3, 4 and 5 feet per second (n = 0.04).

Table 10: Manning's formula for open channel flow: $Q = 1.486 \times S^{0.5} \times A^{1.667} \div (n \times P^{0.667})$ with n = 0.010 and P = wetted perimeter in feet (flow depth = 70 percent of diameter).

References

American Institute of Architects, *Architectural Graphics Standards*, 8th edition. 1988, John Wiley & Sons, Inc., New York.

Beasley, R.P., Gregory, J.M. and McCarty, T.R., *Erosion and Sediment Pollution Control*, Second Edition. Iowa State University Press, Ames, Iowa.

MWPS-18, *Livestock Waste Facilities Handbook*. 1985, Midwest Plan Service, Iowa State University, Ames, Iowa.

Schwab, G.O., et. al., *Soil and Water Conservation Engineering*. 1981, John Wiley & Sons, New York.

Published with funds provided to the Missouri Department of Natural Resources from the Environmental Protection Agency, Region VII. To learn more about water quality and other natural resource issues, contact the Missouri Department of Natural Resources, P.O. Box 176, Jefferson City, MO 65102. Toll free 1-800-334-6946.

University Extension
UNIVERSITY OF MISSOURI SYSTEM
LINCOLN UNIVERSITY

■ Issued in furtherance of Cooperative Extension Work Acts of May 8 and June 30, 1914, in cooperation with the United States Department of Agriculture. Ronald J. Turner, Director, Cooperative Extension, University of Missouri and Lincoln University, Columbia, MO 65211. ■ University Extension does not discriminate on the basis of race, color, national origin, sex, religion, age, disability or status as a Vietnam era veteran in employment or programs. ■ If you have special needs as addressed by the Americans with Disabilities Act and need this publication in an alternative format, write ADA Officer, Extension and Agricultural Information, 1-98 Agriculture Building, Columbia, MO 65211, or call (314) 882-8237. Reasonable efforts will be made to accommodate your special needs.