RESEARCH BULLETIN 715 OCTOBER, 1959

UNIVERSITY OF MISSOURI COLLEGE OF AGRICULTURE

AGRICULTURAL EXPERIMENT STATION

J. H. LONGWELL, *Director*

The Tractive Force Theory Applied to Stability of Open Channels in Cohesive Soils

E. T. SMERDON AND R. P. BEASLEY

(Publication authorized October 24, 1959)

COLUMBIA, MISSOURI

CONTENTS

ACKNOWLEDGMENTS

Acknowledgments are made to R. E. Stewart for suggestions and constructive criticism; to M. M. Jones for assistance and counsel; to J. F. Thornton, V. M. Jamison and E. M. Kroth, ARS-SWC, USDA, for providing the equipment for the construction of the hydraulic flume and for the use of the USDA Soil Mechanics laboratory facilities; to C. M. Woodruff for the loan of certain soil testing apparatus; and to Fred Whitaker for aid in performing the hydraulic tests.

The information in this bulletin was condensed from a dissertation submitted by the senior author to the Graduate Faculty of the University of Missouri in partial fulfillment of the requirements for the degree of Doctor of Philosophy.

This bulletin reports on Department of Agricultural Engineering Research Project 43, Soil and Water Conservation Management.

ABSTRACT

The tractive force theory presents a logical criterion by which the problem of the stability of open channels in cohesive soils can be investigated. The purpose of this study was to investigate a number of cohesive soils, both in a soil physics laboratory and in a hydraulic flume, to determine if the critical tractive force could be correlated to the physical properties of the soils.

Eleven Missouri soils were selected for the tests. These soils were chosen to give a wide range in the degree of soil cohesion. The soils ranged from a silty loam soil with little cohesion to a highly cohesive clay soil. The plasticity indexes of the soils ranged from 6.6 to 44.1.

The critical tractive force of each soil was determined from tests in a hydraulic flume which was 60 feet long, 2.51 feet wide, and 1.5 feet deep. The hydraulic flume was equipped so that soil samples could be placed in the bottom of the flume for the tests. The critical tractive force for each of the soils tested was then related to pertinent physical properties of the soils.

The data from the the hydraulic tests and physical tests on the soils were analyzed statistically to determine the significance of the apparent correlation between critical tractive force and pertinent soil properties. For the soils tested, the critical tractive force was found to be well correlated with each of the following soil properties: (1) The plasticity index, (2) the dispersion ration, (3) the mean particle size, and (4) the percent clay. A less significant correlation existed between critical tractive force and the phi-mean particle size.

The data indicated that the critical tractive force exhibited a logarithmic relationship to the soil properties selected for analysis. Therefore, in the statistical analysis, it was often more fruitful to use the common logarithms of the values instead of the values themselves. This procedure permitted straight line regression equations to be fitted to the experimental data. To evaluate the scatter of the experimental points about the regression line, the standard deviations from regression were determined for each set of data.

The results of the study indicate that the following conclusions can be drawn: (1) The problem of the stability of open channels in cohesive soils can be studied on the basis of the tractive force theory. (2) The critical tractive force in cohesive soils is related to certain physical properties of the soils. Therefore, the effect of soil cohesion on open channel stability can be determined by physical tests of the soils. And (3), for the soils tested, the critical tractive force is best correlated to either the plasticity index or the dispersion ratio, although good correlation also exists between the critical tractive force and either the mean particle size or the percent clay.

The Tractive Force Theory Applied to Stability of Open Channels in Cohesive Soils

E. T. SMERDON AND R. P. BEASLEY

INTRODUCTION

Stable channel design is of great importance in the fields of engineering concerned with the design of open channel water conveyance systems. For example, the design of any water conveyance system in which the water is carried in unlined earth channels, requires knowledge of the relationships between the flowing water and the material composing the channel bed. If this knowledge is not adequate or basically sound, the channel may fail due to lack of stability.

The problem of the design of stable channels has received considerable attention in recent years. Contributions to the science of stable open channel design have come from many investigators. These investigators have based their design criteria primarily on three different concepts: the concept of limiting velocities, the regime theory, and the tractive force theory. Stable channel design based on limiting velocities is an empirical design. Values of limiting velocities that should be used in the design of stable channels in various materials, have been given by several investigators. (8, 14, 21). This is the design criterion that has been widely used in the design of small agricultural channels such as terrace or diversion channels (4, 9).

The regime theory is based on the concept that any open channel or river, which has bed material with certain given properties and is required to carry a certain sediment load, will "establish its own regime" for any given rate of flow. By "establish its own regime," is meant that the channel characteristics, including slope and channel dimensions, will in some way be controlled by the aforementioned conditions of flow. Stable channel design on the basis of the regime theory is also based on empirical data. The regime theory cannot be applied with confidence to channels constructed in materials other than those for which the regime relationships were developed.

The tractive force theory, as opposed to the limiting velocity criterion and the regime theory, is primarily theoretical, in that it offers a way to evaluate the shear at the interface between the flowing water and the channel bed material. This shear is called the tractive force. For channels in noncohesive soil, it has

been possible to relate the tractive force at which the bed movement begins to physical properties of the noncohesive soil (13). However, for channels in cohesive soils the relationships between tractive force and soil movement are, as yet, not adequately determined. Tractive force equations are developed in later sections of this bulletin.

The purpose of this bulletin is to present some basic relationships between the maximum permissible tractive force which can exist without causing the channel to scour and the physical properties of the cohesive soil composing the channel bed. This maximum permissible tractive force is defined as the critical tractive force and is that tractive force which causes general movement of the particles composing the channel bed.

FACTORS INFLUENCING STABILITY OF OPEN CHANNELS IN COHESIVE SOILS

Factors influencing the stability of open channels in non-cohesive soils have been discussed by Simons (22). The factors which are most important in determining the stability of open channels in cohesive soils are channel discharge, channel shape, channel slope, sediment load of the flowing water, and the channel boundary material.

Channel discharge. Open channels are subjected to a wide variety of conditions of continuity in time of channel discharge, depending on the use for which the channel conveys water. For example, channels which supply water to a power station or to a municipality would likely be subjected to continuous flow; i.e., the channel would never be permitted to be empty and thereby have the channel bed dry out.

Channels of this type are the easiest to evaluate for stability, since very slow degrading or aggrading of the channel bed would be detected in the extended periods of time that the flow occurs. This type of open channel would not be subjected to the complicating changes in the structure of the bed material that may occur in an intermittently-used channel, due to alternate wetting and drying and alternate freezing and thawing. Fortier and Scobey recognized that channels which carry water continuously would become "seasoned" in time and could withstand higher velocities after this seasoning period (21). This seasoning will occur to a greater extent in channels with cohesive bed materials. The seasoning will be further increased if the water carries colloidal matter, since colloids carried into the channel bed material by infiltration will increase the cohesiveness of the bed material.

Another type of channel discharge would be intermittent discharge, such as that which occurs in an irrigation canal which supplies water only during the

growing season. This type of channel may operate continuously for weeks or even months, and then be inoperative for a similar period of time. The stability of this type of channel may be difficult to evaluate except on an annual basis. The channel may aggrade during periods of low rates of flow and degrade during the maximum rates of flow. However, if the net annual effect is neither aggradation nor degradation, the channel is said to be stable.

Vegetation may appear in the channel during the inoperative season, which will have the effect of increasing the channel roughness. The increased roughness will have the effect of increasing the depth of flow required in the channel for a given discharge. This gives increased tractive force at the channel bed. However, the protection provided by the vegetation should permit a higher limiting tractive force at the bed and therefore the channel should not degrade, even though the tractive force may be increased. If, however, the channel is carrying an appreciable sediment load, sediment deposits may occur within the vegetation on the channel bed.

The last type of channel discharge is that which occurs in channels that are only required to carry storm flow. These channels will carry flow for periods of time ranging from an hour or less to a few days. Terrace channels and some drainage channels are of this type. This type of channel will be dry most of the time and, as in the case of terrace channels, the channels themselves may even be cultivated. The evaluation of the conditions required for channel stability are the most difficult for this type of channel, since the period of time that the channel acually carries water is so limited. Further complications arise in the case of cultivated terrace channels, since the condition of the channel bed is probably not the same for any two periods of channel flow.

Channel shape. The cross-sectional shape of the channel has an effect on the velocity distribution within the channel and this, in turn, affects the tractive force distribution on the channel bed and sides. This tractive force distribution is of utmost importance in the design of stable open channels. Further discussion on tractive force distribution is given in later sections of this bulletin.

Particles on the side-slopes of open channels have a component of gravity acting down the side-slope which tends to cause noncohesive particles to roll down the channel side. This rolling-down effect of particles on the side-slopes of channels in noncohesive soils have been investigated by the U. S. Bureau of Reclamation (5). However, for channels in cohesive soils, this effect will not be nearly so great since gravity is not the only force holding the particles on the channel side-slopes. The rolling-down effect of particles on the side-slopes of channels in cohesive soils was not investigated. Lane has stated that in cohesive soils this rolling-down effect is not important (13).

Channel slope. The effect of channel slope on the stability of open channels is direct, as given in the Du Boys tractive force equation

$$T = \gamma DS \tag{1}$$

where T is the tractive force, γ is the specific weight of water, D is the depth of flow in the channel, and S is the slope of the channel. If the channel slope is so great that the tractive force given in equation 1 exceeds the critical tractive force for channel stability, then the channel bed will degrade. Equation 1 is derived later in this bulletin.

Sediment load. The effect of the sediment load on channel stability has been discussed by E. W. Lane (15). A balance exists between the stability of the channel and the sediment charge of the channel stream. A qualitative analysis of stream morphology indicates that the following relationship exists.

$$Q_s d \cong QS$$

where Q_s is the quantity of sediment being transported, d is the mean diameter of the transported sediment particles, and Q is the channel discharge. If this balance is disrupted, there will be a gradual change in the stream morphology, tending to reestablish the balance.

Boundary material. The purpose of this study was to determine the relationships that exist between the hydraulics of flow in open channels in cohesive soils and the physical properties of the cohesive soils. Thus, the effect of boundary material for channels in cohesive soils is discussed in the remainder of this bulletin.

THEORETICAL ANALYSIS

The tractive force equation that was originally developed by Du Boys is derived in the following sections. Other tractive force relationships are developed in addition to the Du Boys tractive force equation.

Tractive force on the channel bed for uniform flow. When uniform steady flow occurs in an open channel of infinite width, it is possible to consider the forces that must act on a free body of water within the channel. Consider a free body of unit width and unit length as shown in Figure 1. For this free body to be in equilibrium, the summation of forces acting on it must be zero. These forces are the weight of the free body, the pressure forces acting on the sides of the free body, and the boundary shear of the moving water. The resistance to flow offered by the air above the water is ignored. The pressure forces are merely counteracted by similar pressure forces on the opposite sides of the free body. Referring to Figure 1, the component of weight normal to the bed, $\gamma D \cos\alpha$, is opposed by the bed itself, and the component of weight parallel to the bed, $\gamma D \sin\alpha$, is opposed by the boundary shear of the moving water. This boundary shear is the tractive force, T. Thus, the tractive force is given by

$$T = \gamma D \sin\alpha \tag{2}$$

The slope of the channel, S, is given by

$$S = \tan\alpha. \tag{3}$$

If α is restricted to small values then $\sin\alpha = \tan\alpha$. Finally,

$$T = \gamma DS. \tag{1}$$

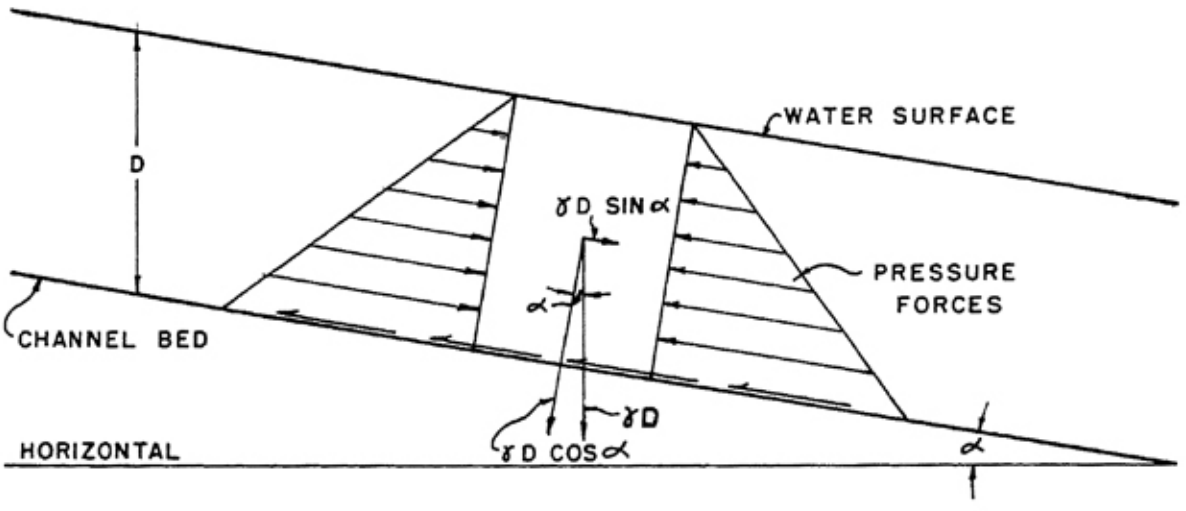

Fig. 1—Tractive force diagram.

Equation 1 is an equation for tractive force which is derived strictly from knowledge of the forces that must act on a free body of water which extends from the surface to the channel bed. However, from the principles of fluid mechanics, it is known that the velocity gradient in the vicinity of a fluid boundary is related to the boundary shear which occurs at the boundary (20). For turbulent flow, Keulegan has given two equations which relate the velocity, v_y, at any point y distance above the fluid boundary to the boundary shear, T, the fluid density, ρ, and the fluid viscosity, ν, (12). The first of Keulegan's equations is to be applied to flow over hydraulically smooth boundaries, and the second to flow over hydraulically rough boundaries. By including a corrective parameter, Δ, Einstein has combined the two Keulegan equations into a single equation (7). This equation is

$$v_y = 5.75\sqrt{\frac{T}{\rho}}\log_{10}(30.2\,\frac{y}{\Delta}). \tag{4}$$

Consider two points a distance y_1 and y_2 above the channel bed. According to equation 4 the difference in velocities at these two points is

$$v_2 - v_1 = 5.75\sqrt{\frac{T}{\rho}}\,[\log_{10}(30.2\,\frac{y_2}{\Delta}) - \log_{10}(30.2\,\frac{y_1}{\Delta})], \tag{5}$$

which can be simplified to

$$v_2 - v_1 = 5.75\sqrt{\frac{T}{\rho}}\log_{10}(\frac{y_2}{y_1}). \tag{6}$$

Solving equation 6 for T,

$$T = \rho\left[\frac{v_2 - v_1}{5.75\log_{10}(\frac{y_2}{y_1})}\right]^2. \tag{7}$$

Thus, an equation is available to relate the tractive force to the velocity distribution above the channel bed. For best results in using equation 7, y_1 and y_2 should be relatively small since it is in that region that the Keulegan equations best apply. It should be noted that equation 7 only holds for turbulent flow in the channel.

Effect of nonuniform flow on tractive force. In channels with constant rate of flow and constant cross-section, the water surface will be parallel to the channel bed if the flow is uniform. If the flow is nonuniform, the water surface is not parallel to the channel bed and the flow will either be accelerating or decelerating. In this case, the analysis given in the preceding section must be modified to account for the force parallel to the channel bed, which is present as a result of the accelerating or decelerating flow. Newton's second law can be used to evaluate this force if the rate of acceleration of each unit mass of fluid is known or can be conveniently measured. However, it cannot be easily meas-

ured by direct means so one must resort to indirect means of evaluating the effect of nonuniform flow on tractive force. Such a procedure is described in the following paragraphs.

Consider an open channel of infinite width. The tractive force acting on the channel is given by

$$T = \gamma DS. \tag{1}$$

By the principle of conservation of energy, the total energy at one section is equal to the total energy at a section downstream plus the work required to overcome the boundary shear of the fluid in moving the distance between the sections.

Referring to Figure 2, the energy relationship is

$$\frac{V^2}{2g} + D + dh = \frac{(V + dV)^2}{2g} + D + dD + \frac{T}{\gamma D} dx \tag{8}$$

where V is the mean velocity of flow and g is the acceleration of gravity. Solving for T and simplifying,

$$T = \frac{\gamma D}{dx}\left[\frac{-2VdV - (dV)^2}{2g} - dD + dh\right]. \tag{9}$$

However, $(dV)^2$ is small compared to 2VdV and can be ignored. This gives

$$T = \gamma D\left[-\frac{V\,dV}{g\,dx} - \frac{dD}{dx} + \frac{dh}{dx}\right]. \tag{10}$$

But $\sin\alpha_o = \frac{dh}{dx}$, and for small α_o, $\sin\alpha_o = \tan\alpha_o = S$, where S is the channel slope. Therefore

$$T = \gamma D\left[-\frac{V\,dV}{g\,dx} - \frac{dD}{dx} + S\right]. \tag{11}$$

Furthermore, from continuity,

$$V = \frac{q}{D} \text{ and } \frac{dV}{dx} = -\frac{q}{D^2}\frac{dD}{dx}, \tag{12) (13}$$

where q is the channel discharge per unit width.
Using equations 12 and 13, equation 11 becomes

$$T = \gamma D\left[\left(\frac{q^2}{gD^3} - 1\right)\frac{dD}{dx} + S\right]. \tag{14}$$

Equation 14 permits the evaluation of the tractive force in a section of channel in which the flow is nonuniform. It should be noted that for accelerating flow $\frac{dD}{dx}$ is negative and for decelerating flow $\frac{dD}{dx}$ is positive.

In using equation 14, it should be noted that difficulty concerning the sign of the slope term, S, will be encountered unless the following facts are noted:

Fig. 2—Nonuniform flow diagram.

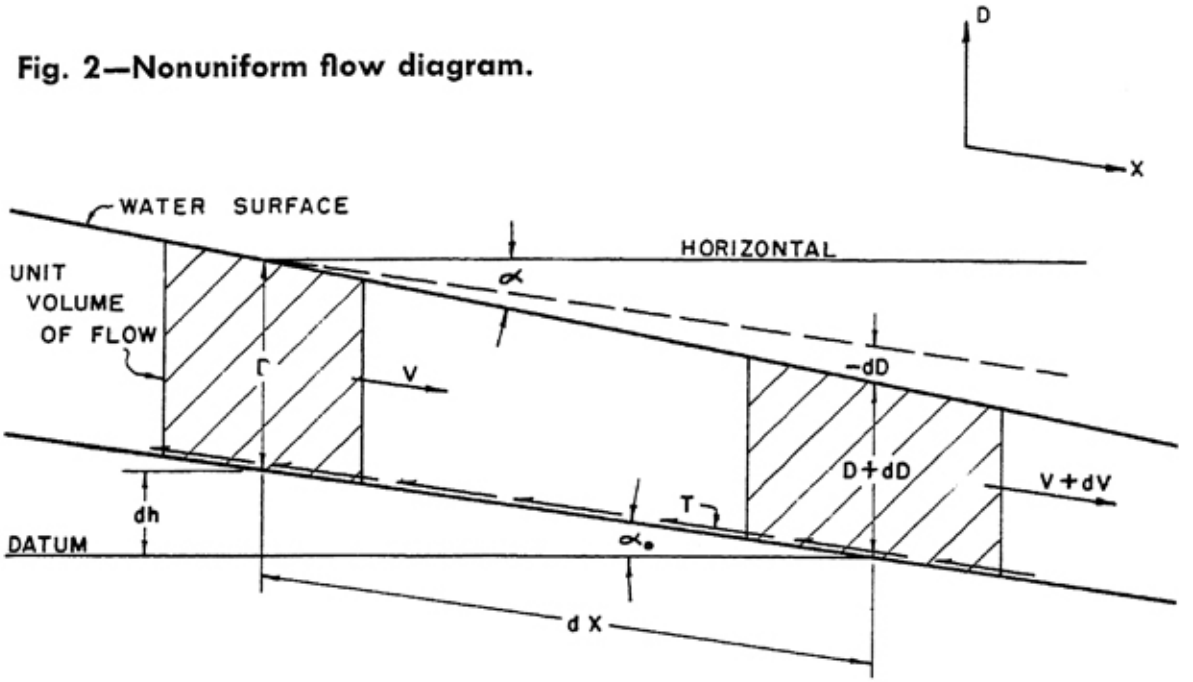

For years the slope of a channel has been considered positive when the channel slopes downward in the direction of flow. This sign convention has been used in hydraulic practice although it is not in accordance with the coordinate axis system used in developing the differential equations of open channel flow (24). Therefore, in using equation 14, the sign of the slope must be changed to conform with the coordinate axis system used in Figure 2. Thus, in using equation 14, the slope is negative for channels which slope downward in the direction of flow. The fact that the sign of the tractive force is changed is not important since only the magnitude of the tractive force is of concern.

Tractive force distribution on channel bed. Equation 1 applies only to infinitely wide channels. However, Schoklitsch has stated that the equation is satisfactory if the ratio of the width of the channel to the deph of flow is 30 or greater (6). For narrower channels, this equation must be modified or the tractive force determined from the velocity distribution in the channel.

Consider the cross-section of the rectangular channel in Figure 3. The average tractive force that acts on the channel bed between points a and b is determined as follows: Using the velocity measurements, draw sufficient isovels (lines of constant velocity) to describe the velocity distribution in the channel. These are the solid lines in Figure 3. Next, draw dashed lines from points a and b, respectively, to the point of maximum velocity, c, making sure that the lines are always perpendicular to the isovels. Since these dashed lines are everywhere perpendicular to the isovels, there is no velocity gradient across the lines, and therefore no net exchange of momentum across the lines. If there is no exchange of momentum across the lines, there is no net shear across the lines. Finally, since there is no interchange of shear between the fluid indicated by

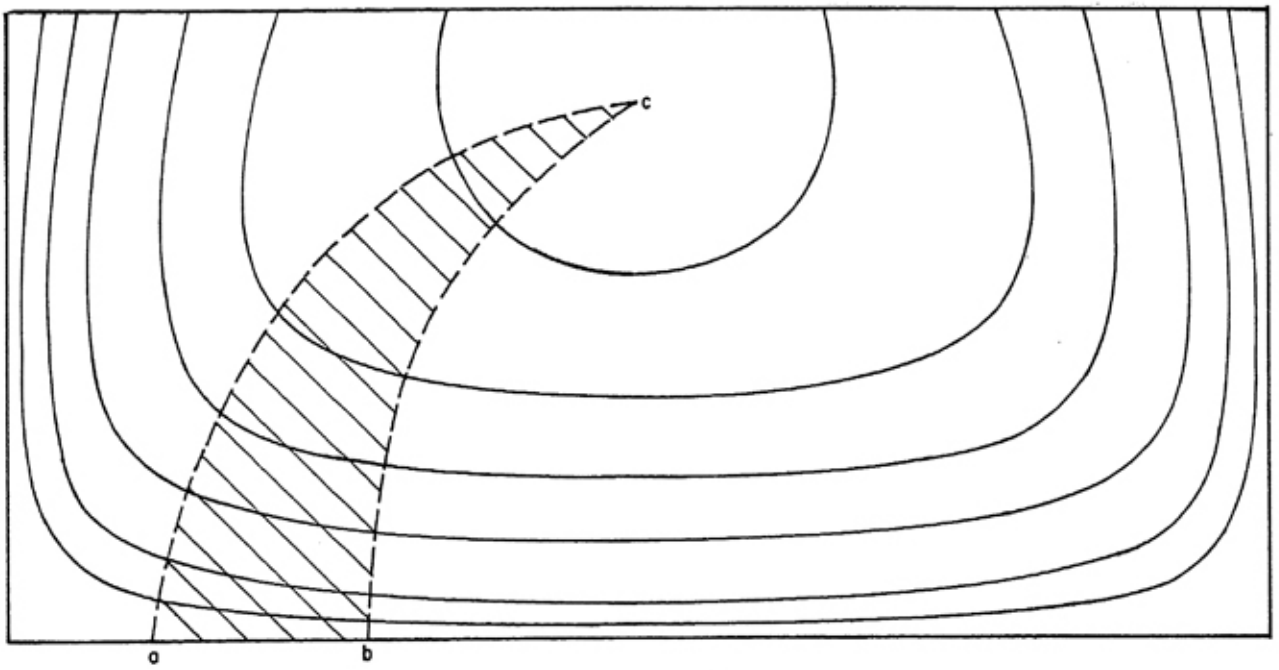

Fig. 3—Tractive force distribution considering momentum exchange.

the cross-hatched area of Figure 3 and the surrounding fluid, then the boundary shear of this fluid must act on the channel bed between points a and b.

To permit the use of equation 1 in calculating the tractive shear along line a-b of Figure 3, effective depth is used instead of depth of flow. Effective depth is defined by

$$D_e = \frac{\text{Area a-b-c}}{\text{Length a-b}} \tag{15}$$

The tractive force along a-b is given by

$$T_{ab} = \gamma D_e S \tag{16}$$

EQUIPMENT AND PROCEDURES

Eleven soils from the state of Missouri were selected for testing. These soils were chosen to give considerable range in physical properties, particularly concerning cohesion of the soil and the ease with which the aggregates were dispersed in water.

In this research, it was desired to relate the critical tractive force of an open channel bed material to the physical properties of the bed material. The study was limited to open channel bed materials consisting of soils with significant cohesive properties.

The physical tests of the soils were performed in the spring of 1959 in a soil mechanics laboratory equipped with the required apparatus. The critical

tractive force of each soil was determined in the spring and summer of 1959 in an outdoor hydraulics laboratory, which consisted of an ample water supply, a hydraulic flume, and related equipment. A detailed discussion of each of these experimental facilities and the experimental procedures is given in the following sections.

Physical Tests of the Soils.

Cohesion was considered to be the most important soil property in a study of the tractive force resistance of fine grained soils. The soils selected ranged from a silty loam to a clay. Tests were performed on the soils to evaluate their physical properties. These data were used to correlate physical properties of the soil to critical tractive force as determined in the hydraulic flume.

Mechanical analysis. The particle size distributions of the soil samples were obtained in accordance with procedures outlined in the American Society for Testing Materials standards, except that three additional hydrometer readings were made at time intervals of 15, 30, and 40 seconds (1).

Plasticity. Plasticity is a property exhibited by soils when an appreciable percentage of the soil consists of clay size particles. However, some materials such as quartz powder are not plastic at any water content or any degree of fineness. Therefore, the property of plasticity in a soil is related to properties of the clay fraction. The plasticity index, I_w, was used as a measure of the plastic properties of the soil samples tested. The plasticity index is defined as the numerical difference between the liquid limit, L_w, and the plastic limit, P_w. The liquid limit is the moisture content at which the soil possesses an arbitrarily small shearing strength. The plastic limit is the moisture content at which the soil begins to crumble when rolled into thin threads. The liquid limit and plastic limit tests were performed in accordance with American Society for T sting Materials standards (1).

Specific gravity. The specific gravity, G_s, of the soil samples did not vary significantly, but the value was used in the determination of the voids ratio and other calculations. The specific gravity of the samples was determined in accordance with the American Society of Testing Materials standards (1).

Voids ratio. The voids ratio, e, was determined from samples taken from the bed material in the flume after termination of the tractive force test. The samples were taken with a minimum of disturbance of the channel bed maerial by pressing a cylindrical sampling container verticially into the channel bed. A spatula was inserted below the container so that an excess of the bed material could be withdrawn with the container. The excess material was then carefully sheared off so that the container was level full. Using this procedure, the volume of bed material sampled was accurately known. The sampling container had a small hole which permitted trapped air to escape as the container was inserted

into the channel bed. This prevented the bed material from being compressed during the sampling process.

Aggregate analysis. In studies of the properties of soils which influence erosion, investigators have determined the structural stability of soil aggregates in water. Several methods have been employed to determine the aggregate size distribution after the soil aggregates have been subjected to a given amount of physical disturbance in the water. Middleton prepared soil samples according to a standardized procedure and then used a modified pipette to determine the percentage of soil aggregates which had a maximum diameter of 0.05 millimeters (17). He used these data to determine the dispersion ratio, D_r, of the soil. The dispersion ratio is discussed in the next section. Lutz, in a similar investigation, determined the aggregate distribution by using a Kopecky elutriator as well as by Middleton's method (16). Lutz calculated the dispersion ratios using the aggregate analyses by the two methods. Other methods that have been used to determine the structural stability of soil aggregates are the wet sieve method, the air-water permeability ratio method, and the hydrometer method (3, 19, 25).

There is no generally accepted method of aggregate analysis. Therefore, only relative comparisons can be made between aggregate analysis data obtained by two different methods. The aggregate analyses reported in this paper were obtained by a hydrometer method. The details of the method are given in the following paragraph.

A representative sample of each soil was permitted to air dry in the laboratory for several days. The sample was then sieved to obtain the fraction between the No. 16 and the No. 8 sieves of the U. S. Standard Sieve Series. The sizes of the openings in the sieves were 1.190 millimeters and 2.380 millimeters, respectively. A sample of approximately 50 grams was carefully weighed and was immediately used in the aggregate analysis without further treatment. The soil sample was placed in a glass graduate, 2.5 inches in diameter and 18 inches in height, which was filled to the 1000-milliliter mark with distilled water. With one hand carefully pressed over the top of the graduate, the graduate was inverted at 5-second intervals for 90 seconds and then at 1-second intervals for 30 seconds. Hydrometer readings were than made at the end of 15, 30, and 40 seconds and 1, 2, 5, 15, 30, and 60 minutes. The results of the hydrometer tests were analyzed in accordance with the mechanical analysis procedure given by the American Society for Testing Materials (1).

One difficulty in using the hydrometer method for aggregate analyses, has been that the hydrometer reading which corresponds to particles of silt size is made at the end of approximately 40 seconds. A hydrometer reading at a time interval this short is subject to error unless exreme care is taken in placing the hydrometer into the suspension. This error is minimized by taking additional readings at 15 and 30 seconds. By doing this and drawing a smooth aggregate analysis curve through the points, an averaging process is accomplished which helps to eliminate errors that might occur in any one of the first few hydrometer readings.

The aggregate analyses were rerun on several of the soil samples with excellent reproducibility.

Dispersion ratio. The dispersion ratio, D_r, was used by Middleton in correlating physical properties of a number of soils to soil erosion (17). The dispersion ratio was defined by Middleton as the ratio of the total weight of silt and clay sized aggregates, as given by the aggregate analysis, to the total weight of silt and clay, as given by the mechanical analysis. In his discussion of the results of his work, Middleton stated:

> The dispersion ratio is probably the most valuable single criterion in distinguishing between erosive and nonerosive soils. It is logical to assume that soil material which is easily brought into suspension is more readily carried away by run-off water (17).

Other investigators have found similar qualitative relationships between the dispersion ratio and the erodability of the soil (2, 16, 19). These investigators used the same definition of dispersion ratio as Middleton, but their methods of aggregate analysis were not necessarily the same.

The dispersion ratio used is the same as that defined by Middleton and was determined using the method of aggregate analysis described in the previous section. The dispersion ratio is the ratio of the ordinates of the aggregate analysis curve and the mechanical analysis curve at the 0.05 millimeter particle size. The uper size limit of the silt particles is taken as 0.05 millimeters.

Hydraulic Tests of the Soils.

For each soil, a value of critical tractive force, T_c, was determined in a hydraulic flume as outlined in the following sections. The critical tractive force of a soil is defined as that tractive force which causes general movement of the particles composing the channel bed.

Hydraulic flume. The hydraulic flume was 60 feet long, 2.51 feet wide and 1.5 feet deep. The flume was constructed of sheet aluminum 0.125 inches thick with aluminum structural members used for framing and end-flanges of the sections. A stilling basin constructed of wood was attached to the upper end of the flume. The stilling basin was about 5 feet long, 2 feet deep and tapered from 2.51 feet wide at the lower end to 5 feet wide at the upper end. To aid in dissipating the turbulence of the incoming flow, baffles were placed in the upper end of the flume just below the stilling basin.

At a distance of 39.5 to 44.5 feet from the upstream end of the flume, the sides of the flume were constructed of clear Plexiglass sheets. These transparent sections permitted direct observations of the channel bed to be made during the tests.

Piezometers were attached to the sides of the flume at distances of 9, 21, 33, 45, and 57 feet from the upstre am end of the flume. The piezometer scales were located such that the depth of flow at that point in the flume could be read directly.

The flume was constructed in sections 12 feet long. The sections were constructed with flanges attached to the ends, which permitted adjacent sections to be bolted together. The sections of the flume were supported on tubular steel beams, which in turn were supported on pairs of mechanical screw jacks spaced at 12-foot intervals. The support arrangement permitted the slope of the flume to be varied from zero to greater than 0.01.

At the outlet end of the flume, a vertically-sliding slotted tail-gate was attached. The depth of flow at the outlet end of the flume could be controlled by manipulating this tail-gate. The tail-gate also could be adjusted to obtain a condition of uniform flow in the flume, i.e., the water surface profile being straight and parallel to the channel bed. If the condition of uniform flow had not been obtained at the time of bed failure, then the critical tractive force had to be corrected according to equation 14.

The section of the flume where the soil sample was placed, was 18 feet long and was located 30 to 48 feet from the upstream end of the flume. The soil was placed in the flume in a layer 2.5 inches thick. The remaining portions of the flume bottom were covered with a concrete fill 2.5 inches thick. These sections of concrete were necessary since an appreciable length of flume is required to establish the normal velocity distribution of flow in the flume. The length of flow necessary to establish the normal velocity distribution was reduced by constructing the baffles in such a manner that the resistance to flow near the bed was greater than that near the surface. Also, the concrete in the upper 12 feet of the flume was considerably rougher than the concrete near the test section or the soil in the test section. The concrete near the outlet end of the flume was required to prevent erosion.

Figure 4 shows the flume and related apparatus.

Flow-rate measurements. The rate of flow in the flume was measured with a 3-foot H-type rate measuring flume developed by the U. S. Soil Conservation Service (11). The H-type flume consists of converging vertical walls cut on a slope at the outlet such that the opening is a trapezoidal projection. Therefore, the throat width increases with depth, giving accurate measurements of small as well as large rates of flow. The H-type flume is constructed according to rigid specifications, thereby making individual calibration unnecessary.

The H-type flume used was located such that at high rates of flow the opening of the flume was partially submerged by the water level in the stilling basin. However, this presented no problem since a head correction factor can be applied if the amount of submergence is known (11). The head on the H-type flume and the amount of submergence were both measured by float-type water level recorders which recorded the water level accurately to 0.01 feet. These records permitted the rate of flow to be accurately determined for any degree of submergence of the H-type flume. Figure 5 shows the H-type flume and water level recorders.

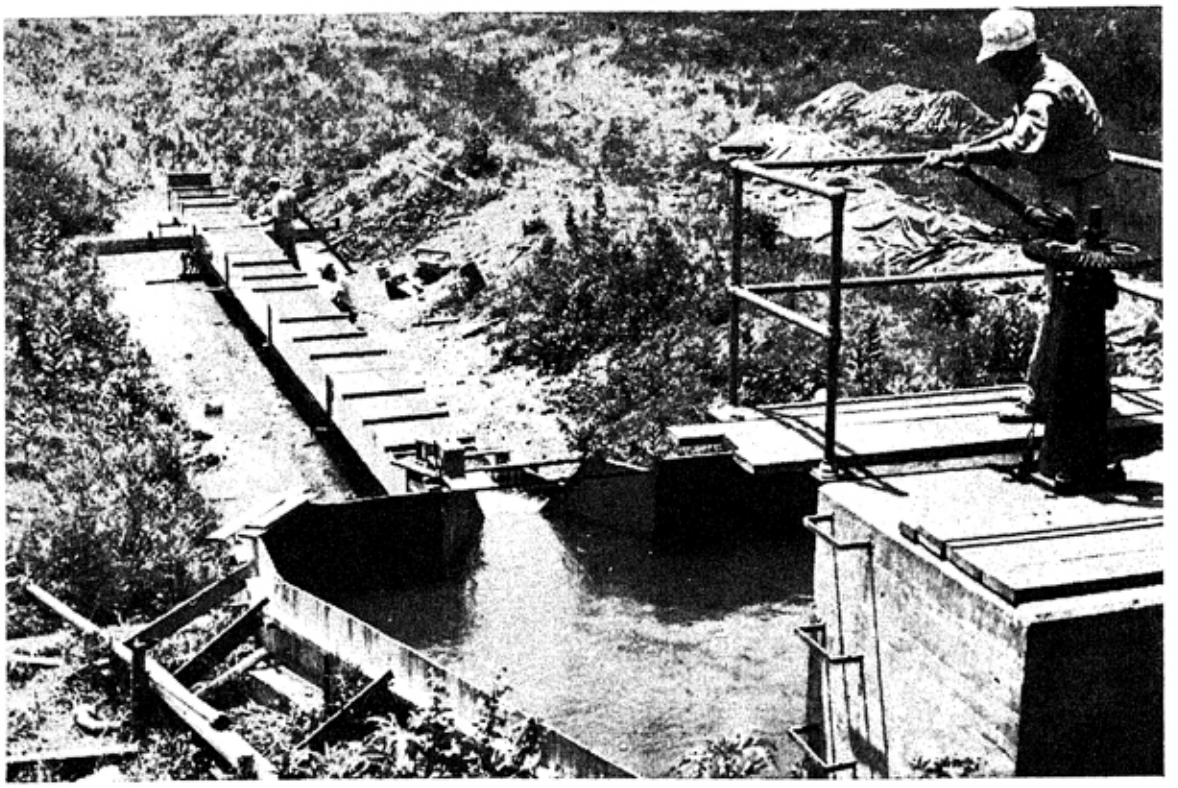

Fig. 4—Overall view of the hydraulic flume and related apparatus.

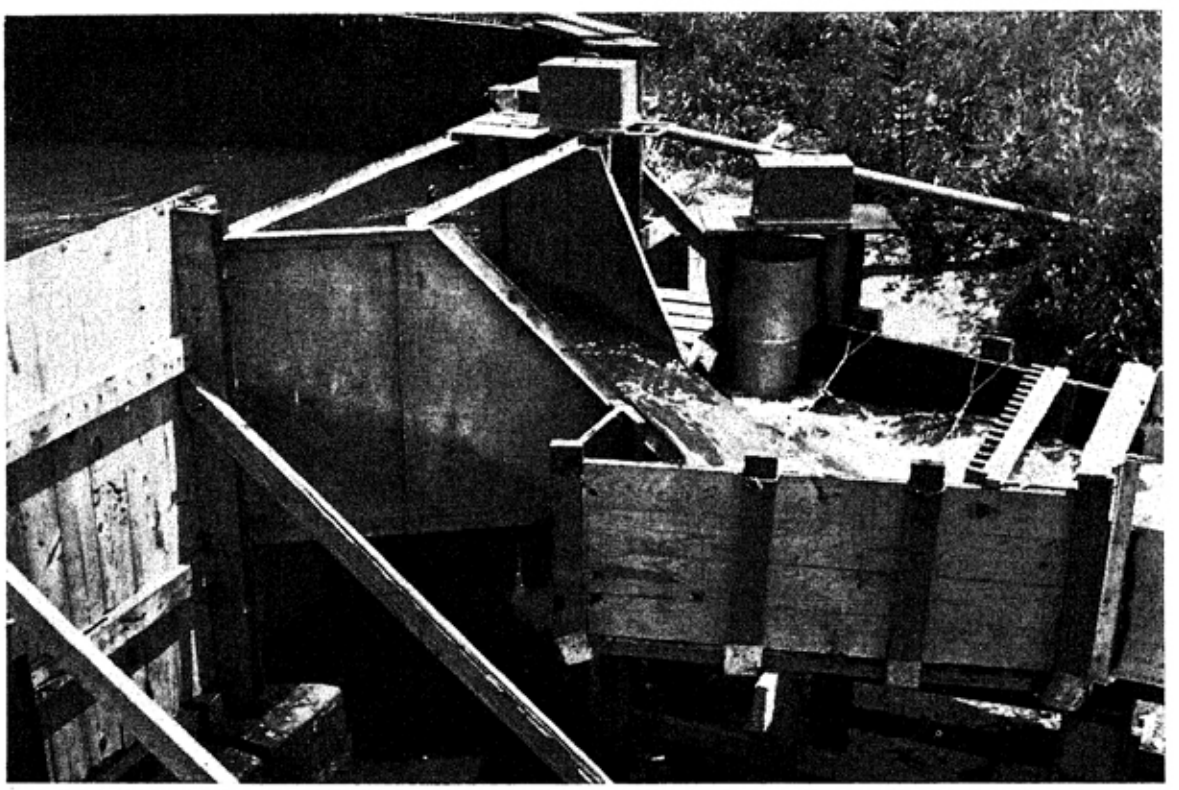

Fig. 5—H-type flow rate measuring flume.

Velocity measurements. The velocity distribution in the hydraulic flume was determined by making point velocity measurements at predetermined points. A Darcy-type pitot-static tube was used for these measurements. The Darcy tube was mounted in an adjustable frame which enabled the tube to be located at any position within the hydraulic flume. The Darcy tube is shown in Figure 6.

The differential pressures of the Darcy tube were observed on an inclined differential manometer. The differential manometer was designed so that the slope of the manometer tubes could be varied during a test in order to give different magnifications of the vertical displacements of the water surfaces in the manometer tubes. The angle of inclination of the differential manometer could be readily changed during a test so that differential pressure multiplication factors of 10, 5, 2, and 1 were obtained. The change could be made without losing the prime of the Darcy tube-differential manometer system. The inclined manometer and view of the test section of the hydraulic flume are shown in Figure 7.

The Darcy tube was calibrated by two methods. In the first method, the surface velocity in the hydraulic flume was determined by a float and by the Darcy tube. The time interval required for the float to travel a measured distance was measured with a stop watch to calculate the surface velocity. For these tests, the depth was sufficient so that the velocity did not change appreciably with depth near the surface. In the second method, the integrated discharge was determined from velocity traverses across the flume. This discharge was compared to the discharge measured by the flow rate measuring device. The first and second methods gave values of the Darcy tube coefficient of 1.05 and 0.99, respectively. The mean value of 1.02 was used.

Water supply and discharge system. The source of water for the hydraulic tests was a 16-acre reservoir which was equipped to discharge water through a 4-foot by 4-foot sluice gate into a large discharge canal. A large basin was constructed to impound water just below the sluice gate. The H-type flow rate measuring flume was attached to this large basin so that it discharged directly into the stilling basin, which was connected to the hydraulic flume. The hydraulic flume was located in the discharge canal. Water from the hydraulic flume discharged into the canal and was carried downstream, away from the test area.

The sluice gate was equipped with a gear mechanism which enabled the sluice gate opening to be accurately controlled. The rate of flow through the flume was controlled by manipulating the sluice gate.

Preparation of the bed material. All soil samples were taken in the spring of the year when the soil was not excessively wet. The soil samples were stored on the ground with polyethylene plastic placed both below and above the samples to prevent excessive moisture changes between the times of sampling and testing in the hydraulic flume.

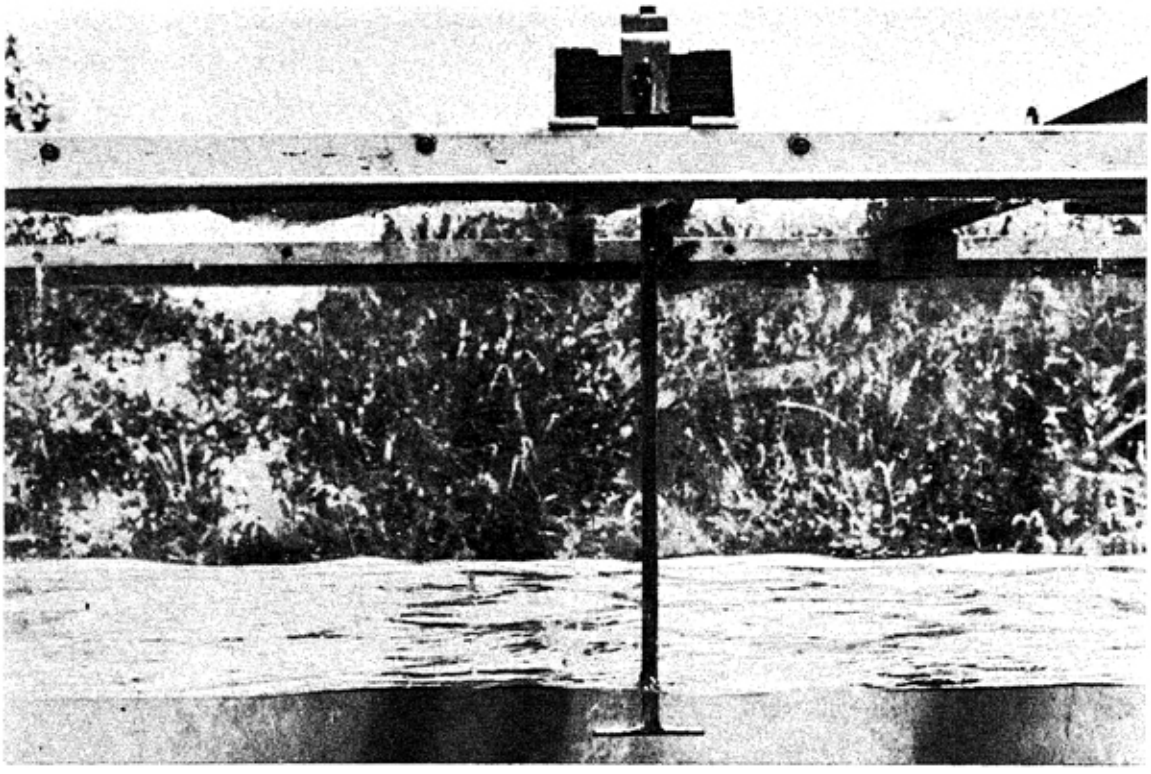

Fig. 6—Darcy-type pitot-static tube.

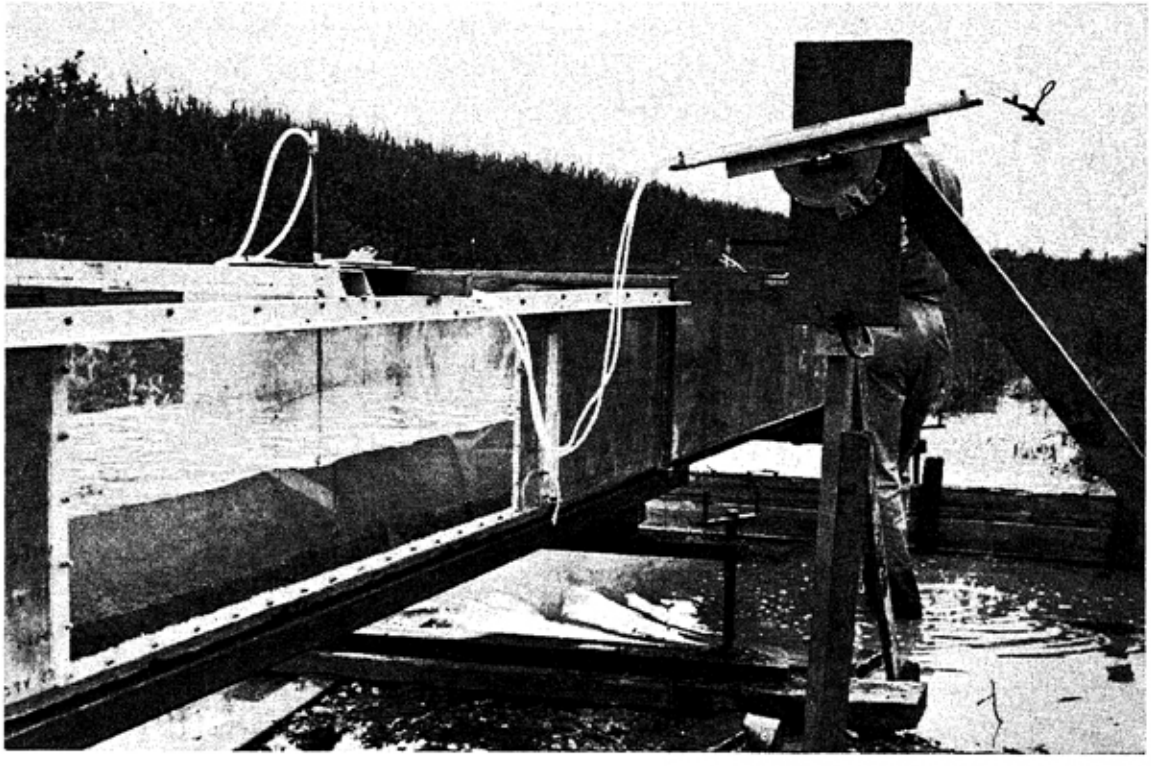

Fig. 7—View of test section including inclined differential manometer.

Approximately 1200 pounds of soil were used for each flume test. The soil was placed in the flume and thoroughly mixed. Lumps of soil were broken up by hand and all foreign particles were removed. The soil was then carefully leveled using a specially constructed template which used the sides of the hydraulic flume as guides. This assured that the depth of the soil sample was the same as the depth of the concrete fill upsteam and downstream from the test section. No attempt was made to compact the soil any more than that which naturally occurred in the process of leveling the bed. The soil was then wetted by slowly admitting water into the flume until the bed was completely soaked. A small amount of coarse gravel was placed on the bed nearest the upper concrete fill to increase the stability at this critical point.

After the bed was wetted, the flume was permitted to drain and the soil sample permitted to dry and consolidate for approximately 20 hours. However, since the flume was watertight, very little drainage of the soil occurred during this 20-hour period and the soil remained essentially saturated.

Tests in the hydraulic flume. At the beginning of each test, the flow from the supply reservoir was admitted very slowly to give a depth of flow in the flume of about one-half inch. This permitted the Darcy tube to be primed prior to the beginning of the actual test and to assure that the piezometers were not clogged. The rate of flow was then increased to give a depth of flow over the bed of about 0.05 feet. After increasing the flow, time was allowed for the system to come into equilibrium. If the depths of flow along the flume as measured by the piezometers indicated nonuniform flow, the tail-gate was adjusted until uniform flow had been established. Velocity traverses were then made across the flume with the Darcy tube positioned at preselected points. In addition, visual observations were made of the bed material and any movement of bed particles noted.

The process of increasing the flow by increments and recording data was continued until general movement of the bed material was observed. Bed failure was defined at the point at which the bed material was in general movement. It was observed that the first area of bed failure occurred at the transition between the concrete and the bed material at the upper end of the test section. These particles were carried down the flume past the transparent flume sides as bedload. The bed was not considered to have failed until the tractive force was sufficient to cause general movement of the bed material.

In one test, the bed was observed to have failed immediately after the flow had been increased by an increment but before uniform flow had been established. In this case, all observations were made immediately and recorded and the tractive force was corrected for the nonuniform flow by using equation 14.

Critical tractive force computations. After data had been collected to determine the conditions of flow at the time of bed failure, the critical tractive force was calculated using equation 7 and equation 1 or 14. If uniform flow had

be established over the test section at the time of bed failure, equation 1 was used. Otherwise, equation 14 was used.

In using equation 7, the velocity profile above the point of bed failure was determined from the velocity traverses with the Darcy tube. This velocity profile was plotted on semi-log paper with the logarithmic scale being the depth above the channel bed and the arithmetic scale being the velociy. Two points were selected from a straight line drawn through the observed points; their respective values were substituted into equation 7.

In most cases, the depth of flow was sufficiently shallow in the flume at the time of bed failure, that the velocity distribution was such that the isovels were essentially horizontal in the center of the flume. Therefore, for calculations of the tractive force at the center of the flume, it was generally unnecessary to employ the procedure for evaluating the tractive force distribution on the flume bed. However, when bed failure occurred with large depths of flow, equation 16 was used to evaluate the tractive shear instead of equation 1 or 14.

DISCUSSION OF DATA AND RESULTS

Data from Physical Tests of the Soils.

The summarized data from the physical tests of the soils are given in Table 1. (Summarized data from the hydraulic tests are also included in this table.) The plasticity index, dispersion ratio, mean particle size, percent clay and phi-mean particle size are all considered to be properties of the soils which may be related to the critical tractive force in cohesive soils.

Since the present study was limited to an investigation of the stability of open channels in cohesive soils, two physical tests were selected which would give a measure of cohesiveness of the soil. The plasticity index, I_w, has been used in the past by soil physicists to measure soil cohesion. This value is evaluated and used in the correlations presented.

The ease with which soil particles are dispersed in water is also a measure of soil cohesion and has been used as an index of the erodability of soils. The ease with which particles disperse in water was measured by the aggregate and mechanical analyses and expressed as the dispersion ratio, D_r.

The mean particle size, M, has been related to critical tractive force in open channels with noncohesive bed materials. This value does not in any way measure the cohesion of a soil since soils with different amounts of particles in the clay range may have the same mean particle size. To evaluate the effect of the clay content of the soils, the percent clay (by weight), P_c, was determined. The upper size limit of the clay particles was taken as 0.002 millimeters.

A parameter which might be useful in relating a single particle size to the critical tractive force in cohesive soils, would be some type of weighted mean

TABLE 1--PHYSICAL PROPERTIES OF SOILS

Soil No.	G_s	L_w	P_w	I_w	D_r	M mm.	P_c	M_ϕ mm.	e	T_c Eq. (1) or (14) lbs/ft^2	T_c* Eq. (7) lbs/ft^2
1	2.61	32.6	22.4	10.2	22.2	0.0192	15.3	0.0103	1.33	0.0199	0.0125
2	2.65	41.2	28.8	12.4	24.8	0.0203	17.0	0.0084	1.46	0.0328	0.0125
3	2.68	32.9	26.3	6.6	73.1	0.0215	16.6	0.0083	1.63	0.0153	0.0084
4	2.66	38.0	24.0	14.0	28.7	0.0130	24.3	0.0025**	1.23	0.0218	0.0217
5	2.63	40.0	25.9	14.1	19.2	0.0094	30.2	0.0011**	1.41	0.0458	0.0354
6	2.68	82.0	37.9	44.1	4.9	0.0003**	57.5		1.78	0.0886	0.0477
7	2.66	39.7	25.6	14.1	11.9	0.0150	22.9	0.0063	1.48	0.0325	0.0161
8	2.66	37.0	28.8	8.2	35.7	0.0147	16.8	0.0085	1.40	0.0225	0.0161
9	2.70	43.8	25.4	18.4	21.2	0.0108	30.7	0.0008**	1.32	0.0241	0.0217
10	2.77	45.1	29.8	15.3	15.7	0.0112	24.5	0.0052**	1.84	0.0384	0.0264
11	2.69	60.9	30.5	30.4	10.3	0.0038	44.1		1.62	0.0546	0.0317

*Symbols: G_s = Specific gravity, L_w = liquid limit, P_w = plastic limit, I_w = plasticity index, D_r = dispersion ratio, M = mean particle size, P_c = per cent clay, M = phi-mean particle size, e = voids ratio, T_c = critical tractive force.

**Estimated values from extrapolation of particle size curve.

which gives increased significance to the small amount of particles at both ends of the particle size analysis. For example, a small change in the percentage of clay which might appreciably alter cohesion would be indicated by this parameter. Such a parameter is the phi-mean particle size, $M\varphi$, and is discussed by G. O. Otto (18). The phi-mean particle size can be determined from a phi-probability graph of the mechanical analysis. The abscissae represent the percent of the particles finer (by weight) on a probability scale. The ordinates represent phi-units. Phi-units are defined as the logarithm to the base 2 of the particle size in millimeters.

A graphical method of determining the phi-mean particle size is given by Otto (18). This method consists of drawing a straight line through the points on the phi-probability curve which represent 15.9 and 84.1 percent finer. The value of the phi-mean particle size is the size (in phi-units) which corresponds to the intersection of this straight line and the 50 percent finer line.

In the cases of soils numbered 4, 5, 9, and 10, the percentage of clay in the soil was so high that no measurement could be made of the particle size at which 15.9 percent was finer. In these cases the phi-mean size was estimated by extrapolation of the lower end of the particle size curves. These estimated values are indicated by an asterisk in Table 1. For soils numbered 6 and 11, the extrapolation would have been so great that it was not considered feasible to estimate phi-mean size.

Data from Hydraulic Tests of the Soils.

The summarized data from the tests performed in the hydraulic flume are presented in Table 1. The calculations were made using equation 7 and either equation 1 or equation 14, depending on whether uniform flow was established over the test section at the time of bed failure.

Calculations of critical tractive force. In using equation 7, it was necessary to determine the velocity gradient immediately above the channel bed at the point of bed failure. This was obtained from the velocity measurements made with the Darcy tube. However, the velocity of flow immediately adjacent to the bed was difficult to measure accurately, due to the disturbance of the flow caused by the Darcy tube being so close to a solid boundary. Therefore, to get a more reliable measure of the velocity gradient near the bed, the entire velocity profile above the point in question was plotted on semi-log paper and a straight line drawn through the points. The values of v_1, v_2, y_1, and y_2 were taken from points on this straight line and substituted into equation 7 to determine the value of the critical tractive force for that soil.

Critical tractive force computations made using equation 1 or 14 required that the depths of flow at different points along the flume be known. These were determined from the piezometers which were attached to the sides of the flume. If the depth of flow was constant over the test section, then equation 1 was used. However, when testing soil number 8, the depth of flow was not

constant over the test section at the time of bed failure and critical tractive force calculation was made according to equation 14.

By restricting the tractive force determinations to the center third of the flume, the necessity to consider the tractive force distribution on the bed of the flume was avoided, with the exception of one case where the depth of flow was great. In this case, the effective depth was determined and equation 16 was used.

The evaluation of critical tractive force by equation 7 consistently gave values smaller than evaluation by equation 1 or 14. No reason for this discrepany is presented. However, the values obtained by equation 1 or 14 are thought to be more reliable than those obtained by equation 7 because the latter values were obtained from the velocity gradient near the channel bed, which was very difficult to measure accurately. However, a definite relationship does exist between the values of the critical tractive force obtained by the two methods.

Stages of bed failure. In the early stages of each test, aggregated particles were observed to move as bed-load. These particles appeared to have been surface aggregates which were very loosely held, since after a short time the movement decreased. In the case of the very cohesive soils, the bed then remained quite stationary until the time of bed failure. Failure was considered to have occurred when the bed particles began to disperse and noticeable degradation of the bed occurred. In all tests, the critical tractive force was exceeded in order to observe the channel bed at a tractive force greater than that considered critical.

In the least cohesive soils, the loose surface aggregates were carried away immediately as bed-load. As the test continued, slight bed-load movement was always observed even at low tractive forces. However, at some later time during the test, there appeared to be a change from slight bed-load movement to heavy bed-load movement with particles going into suspension. Noticeable degradation of the bed occurred at the same time. This was considered bed failure. During the tests of the least cohesive soils, the channel bed became very smooth and then parallel channels of scour occurred down the flume. In one case, a slight dune pattern was noted after the test.

The determination of the exact time of channel bed failure is subject to the judgment of the observer. All tests were performed with the same crew; the same person always made the observations of the channel bed.

Critical Tractive Force Related to Soil Properties.

Data from the physical tests of the soils were plotted versus the critical tractive force on appropriate graphs in an attempt to determine which physical properties show the best correlation with critical tractive force. In every case, the critical tractive force was considered as the dependent variable and plotted on a logarithmic scale. The soil properties were considered to be the independent variables and were either plotted on arithmetic or logarithmic scales, depending on which type of representation gave the least scatter about a straight line regression.

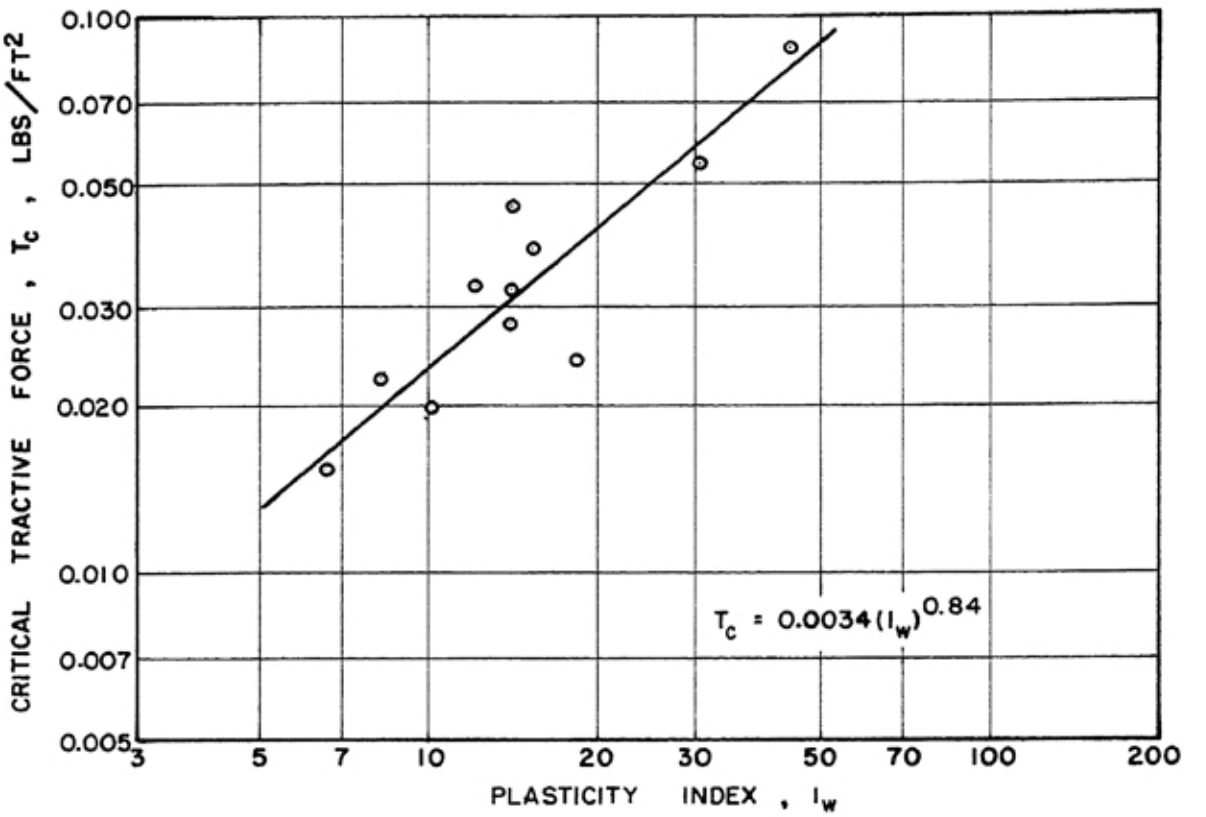

Fig. 8—Critical tractive force determined by equation (1) or (14) versus the plasticity index.

In making the statistical analyses of the data which were represented on logarithmic scales, the common logarithms (logarithms to the base 10) of the individual values were used instead of the values themselves. This permitted a simpler calculation of the regression equations (equations fitted by the least squares method). Furthermore, the standard deviations from regression (standard error of estimate) were calculated using the deviation of critical tractive force from the regression of critical tractive force on the independent variable. The standard deviations from regression always refer to and are in terms of the common logarithms of the critical tractive forces.

Relation of plasticity index to critical tractive force. The plasticity index, I_w, is plotted versus the critical tractive force, T_c, in Figures 8 and 9. Equation 1 or 14 was used to determine the critical tractive force in Figure 8 and equation 7 was used for Figure 9.

The data appear to be well correlated when plotted on log-log graph paper. For the data in Figure 8, the correlation coefficient, r, is 0.896 (23). This correlation coefficient was tested for significance and was found to be significant at the 1 percent level (23). The regression line for the data in Figure 8 has the equation

$$T_c = 0.0034\ (I_w)^{0.84} \tag{17}$$

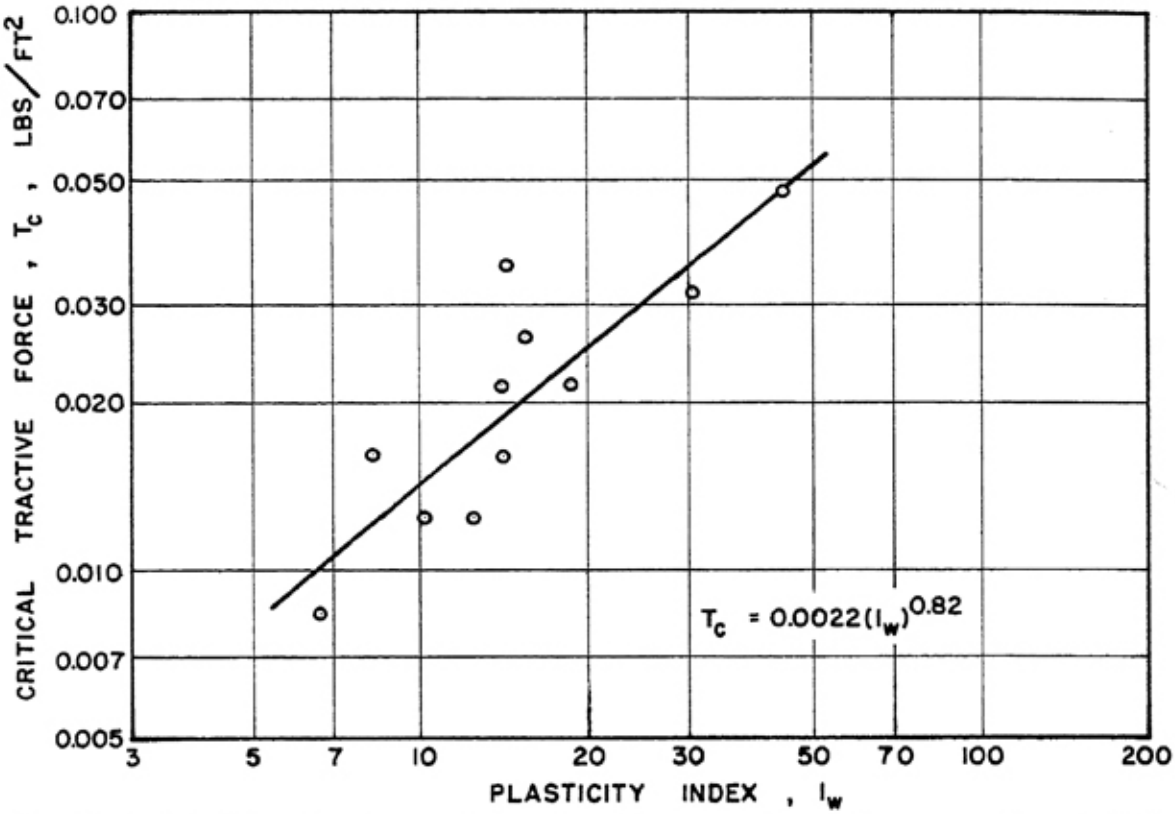

Fig. 9—Critical tractive force determined by equation (7) versus the plasticity index.

The standard deviation from regression, S_r, is 0.11 (23). These calculations were made with the data expressed in terms of logarithms since it is in that form that the data have a straight line relationship.

The data represented in Figure 9 have a correlation coefficient of 0.849 which is also significant at the 1 percent level. The equation of the regression line is

$$T_c = 0.0022\ (I_w)^{0.82} \tag{18}$$

and the standard deviation from regression is 0.131.

Relation of dispersion ratio to critical tractive force. The dispersion ratio, D_r, gives a measure of the ease with which soil aggregates are dispersed in water. The dispersion ratio exhibits an inverse relationship to the plasticity index. Moreover, the dispersion ratio measures a physcal phenomenon which actually occurs in the erosion of a channel bed, i.e., the dispersing of soil aggregates in water. The dispersion ratio might be expected to be better correlated with critical tractive force than is the plasticity index.

The graphs of dispersion ratio versus critical tractive force, as determined by two methods, are given in Figures 10 and 11. The critical tractive force was determined by equation 1 or 14 in Figure 10 and by equation 7 in Figure 11.

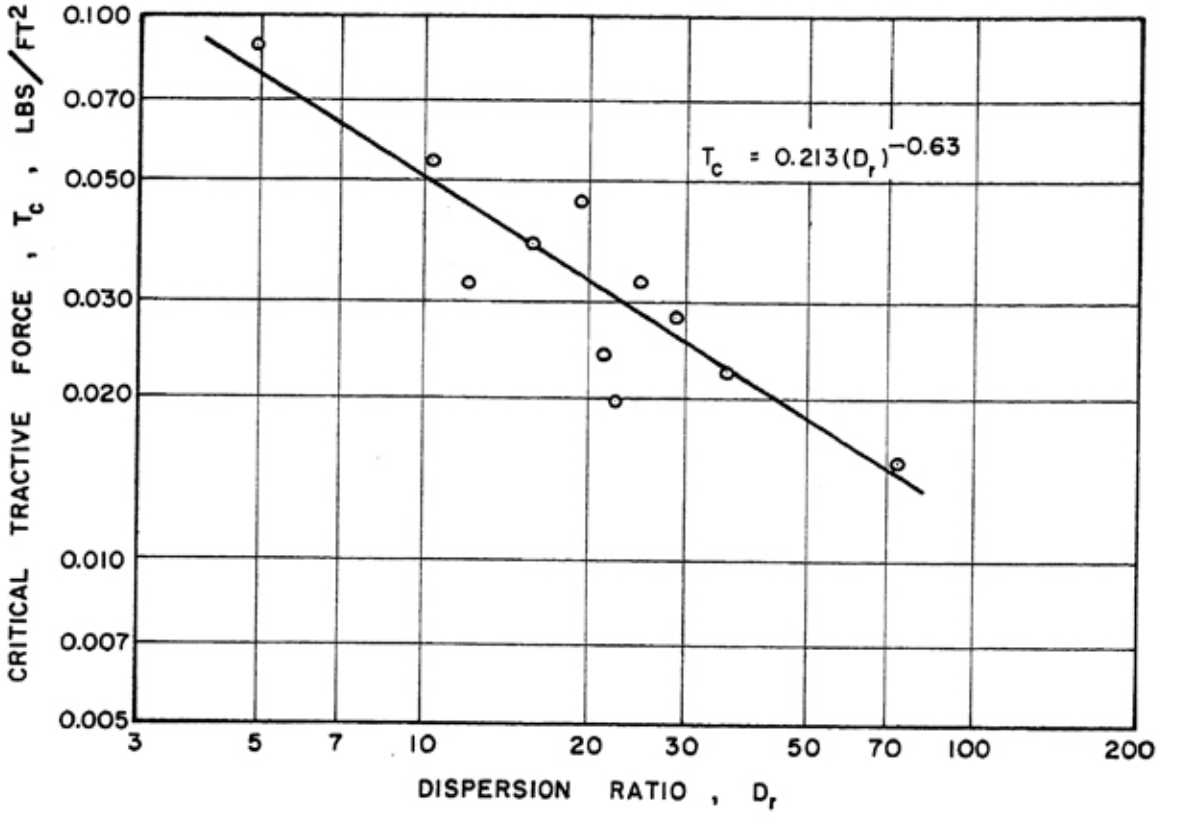

Fig. 10—Critical tractive force determined by equation (1) or (14) versus the dispersion ratio.

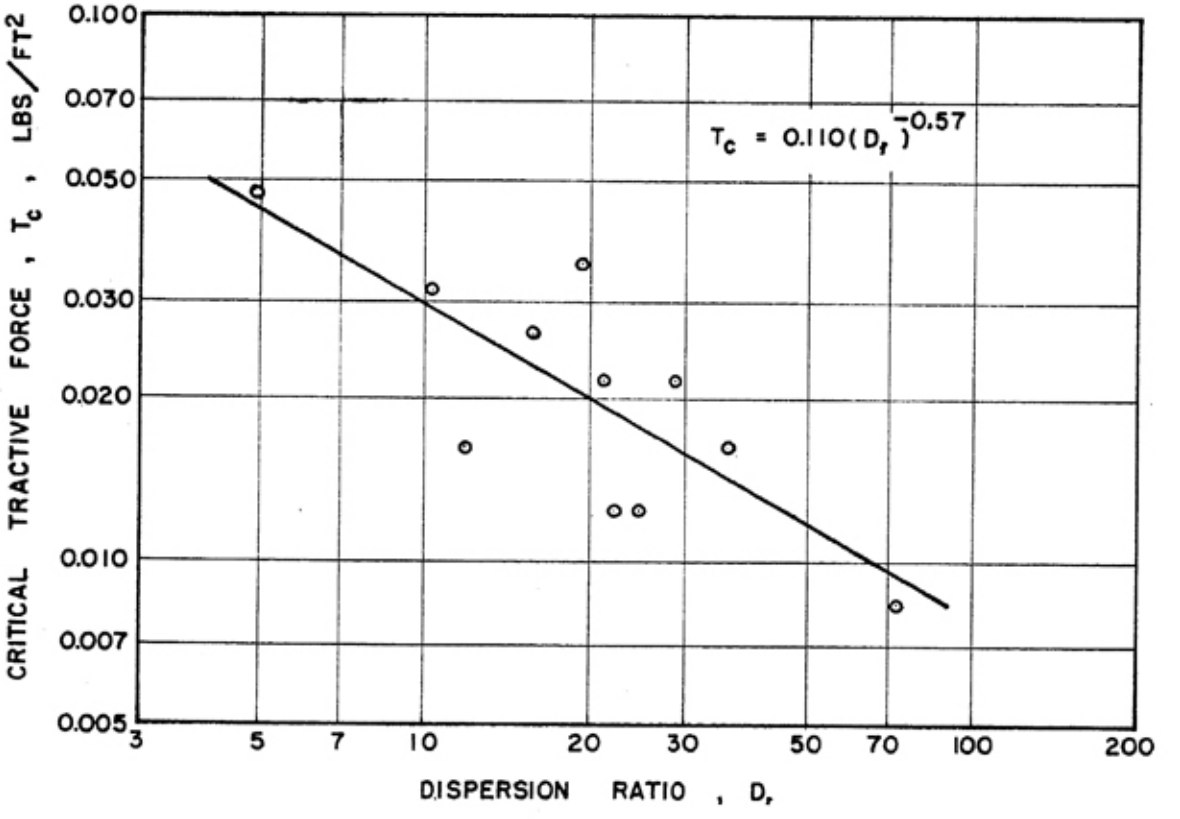

Fig. 11—Critical tractive force determined by equation (7) versus the dis-

The correlation coefficient is minus 0.892 for the data in Figure 10. The negative value has no significance in itself except to indicate that the slope of the regression line is negative. The correlation coefficient was again significant at the 1 percent level. The regression line in Figure 10 has the equation

$$T_c = 0.213\ (D_r)^{-0.63} \tag{19}$$

The standard deviation from regression is 0.103.

The data in Figure 11 have a correlation coefficient of minus 0.795 and the regression line has the equation

$$T_c = 0.110\ (D_r)^{-0.57} \tag{20}$$

The standard deviation from regression is 0.146.

Relation of mean particle size to critical tractive force. For noncohesive soils, the critical tractive force has been shown to increase as the mean particle size, M, increases (13). However, for soils with very fine particles, this same relationship would not be expected to hold since the forces of cohesion will have an effect on the critical tractive force. In fact, an inverse relationship exists between the mean particle size and the critical tractive force as shown in Figures 12 and 13.

For the soils tested, the correlation between mean particle size and critical tractive force seems good. However, this may be due to the fact that all the soils tested developed from similar parent material and the particle size curves were all of similar shape. Therefore, for these particular soils, the mean particle size is related to the amount of clay in the soil. This is not an inherent relationship, however, and the correlation between mean particle size and critical tractive force should not be expected to hold for soils of different origin than those tested. However, for other cohesive soils, the trend should be similar to that indicated in Figures 12 and 13.

The coefficient of correlation for the data in Figure 12 is minus 0.860. This is a significant correlation at the 1 percent level. In this case the common logarithm of T_c was taken as the dependent variable and M as the independent variable. This gave a better correlation than when the common logarithm of M was taken as the independent variable. The regression line for the data in Figure 12 is

$$T_c = 0.074 \times 10^{28.1M} \tag{21}$$

and the standard deviation from regression is 0.116.

A similar analysis of the data in Figure 13 gives a correlation coefficient of minus 0.950. This, too, is a significant correlation at the 1 percent level. The regression line is

$$T_c = 0.055 \times 10^{-33.9M} \tag{22}$$

and the standard deviation from regression is 0.079.

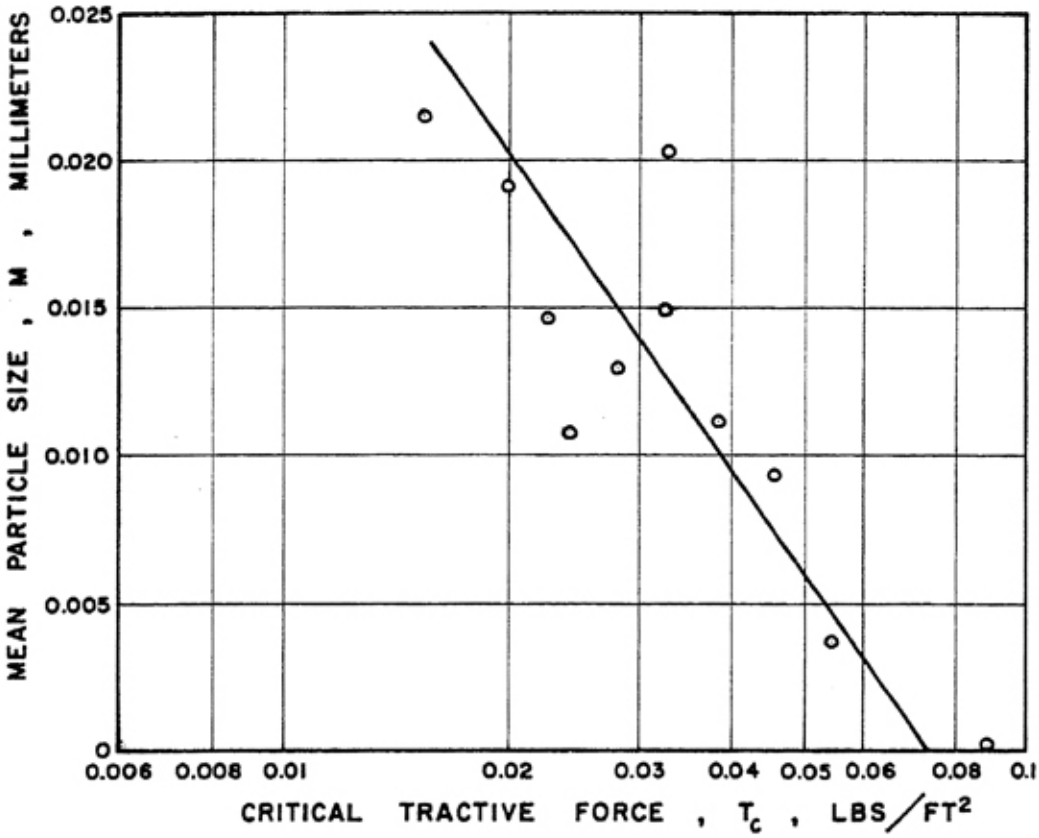

Fig. 12—Critical tractive force determined by equation (1) or (14) versus the mean particle size.

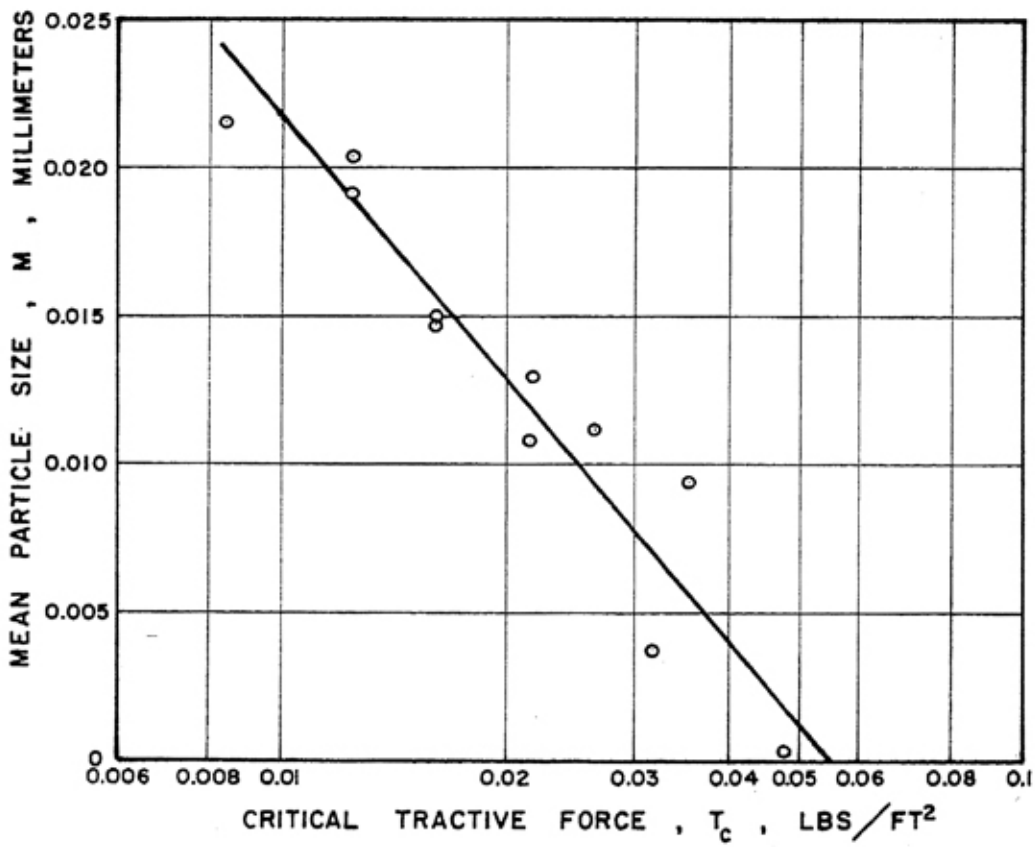

Fig. 13—Critical tractive force determined by equation (7) versus the mean particle size.

Relation of percent clay to critical tractive force. It is the clay fraction of a soil which determines the cohesion of the soil. However, all clays do not exhibit the same tendencies toward cohesion when present in the same amounts. Therefore, percent clay, P_c, alone would not be expected to indicate the cohesive properties of all soils. However, percent clay plotted versus critical tractive force in Figures 14 and 15 indicates that, for the soils tested, there is a good correlation between critical tractive force and percent clay.

Analysis of the data in Figure 14 gave a correlation coefficient of 0.980, which is significant at the 1 percent level. The regression equation is

$$T_c = 0.0103 \times 10^{0.0183P_c} \tag{23}$$

and the standard deviation from regression is 0.0458.

The data in Figure 15 also showed significant correlation at the 1 percent level with a correlation coefficient of 0.888. The regission line has the equation

$$T_c = 0.00645 \times 10^{0.0182P_c} \tag{24}$$

and the standard deviation from regression is 0.114.

Relation of phi-mean particle size to critical tractive force. The phi-mean particle size, $M\varphi$, was selected as a single parameter which would give increased significance to slight changes in the percentage of clay and still consider the rest of the particle size distribution. The phi-mean particle size is plotted versus critical tractive force in Figures 16 and 17. Soils 4, 5, 9, and 11 contained sufficient clay that it was necessary to extrapolate the particle size curves to determine the phi-mean particle size. Soils numbered 6 and 11 contained so much clay that even this was not feasible and no phi-mean particle sizes are given.

The correlation between phi-mean particle size and critical tractive force was not as good as that given between critical tractive force and the other physical properties of the soils investigated. The data plotted in Figure 16 have a correlation coefficient of minus 0.508 which is significant only at the 18 percent level. The data in Figure 17 have a correlation significant at the 2 percent level with a correlation coefficient of minus 0.782.

Phi-mean particle size is not as well correlated to critical tractive force as are the other soil properties tested. Also, for two soils, the phi-mean particle size could not be determined and for four others, it was estimated. Therefore, for soils with particle size distributions similar to those tested, the phi-mean particle size does not appear useful and consequently no quantitative relationships are given.

Relation of voids ratio to critical tractive force. In previous studies of the stability of open channels on the basis of limiting velocities, the effect of compactness of the bed material has been considered (13). However, in this

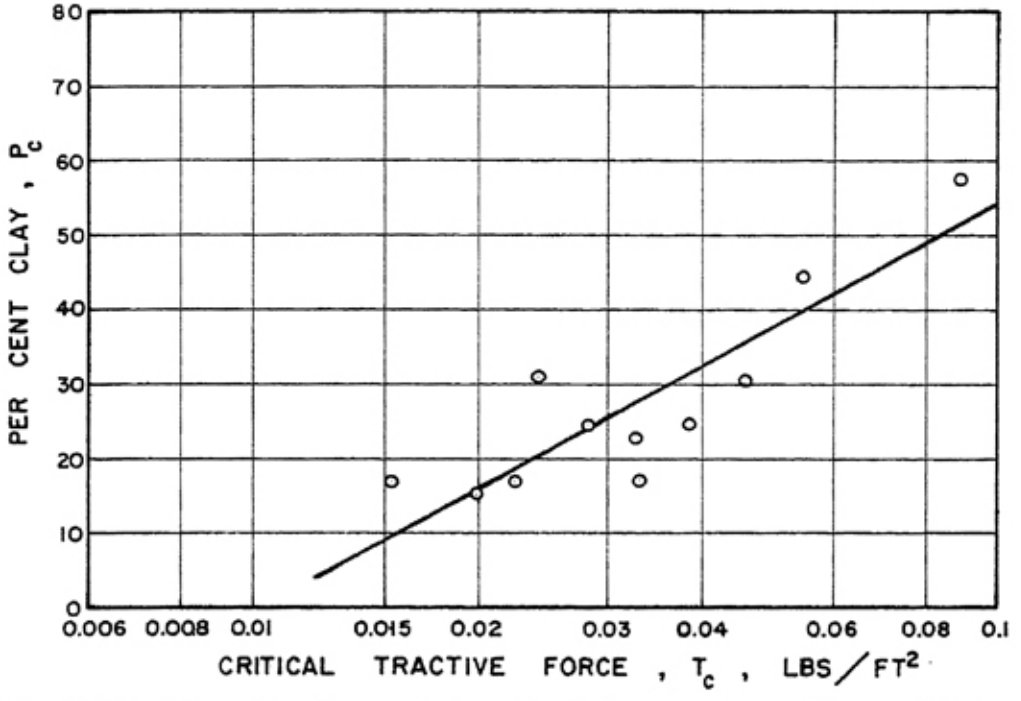

Fig. 14—Critical tractive force determined by equation (1) or (14) versus percent clay.

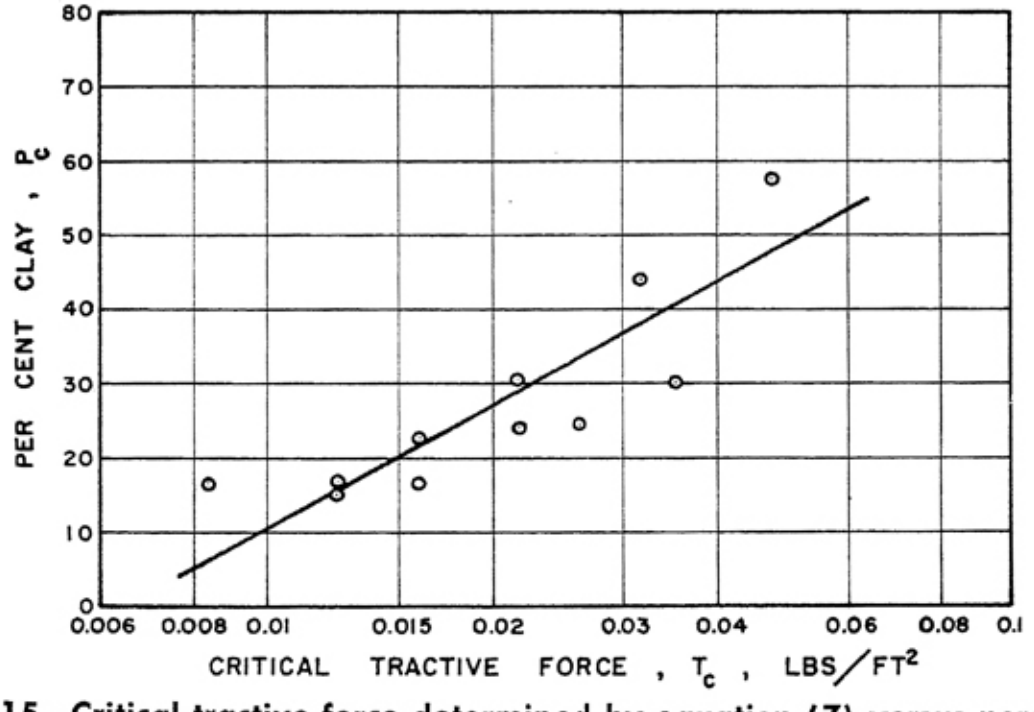

Fig. 15—Critical tractive force determined by equation (7) versus percent clay.

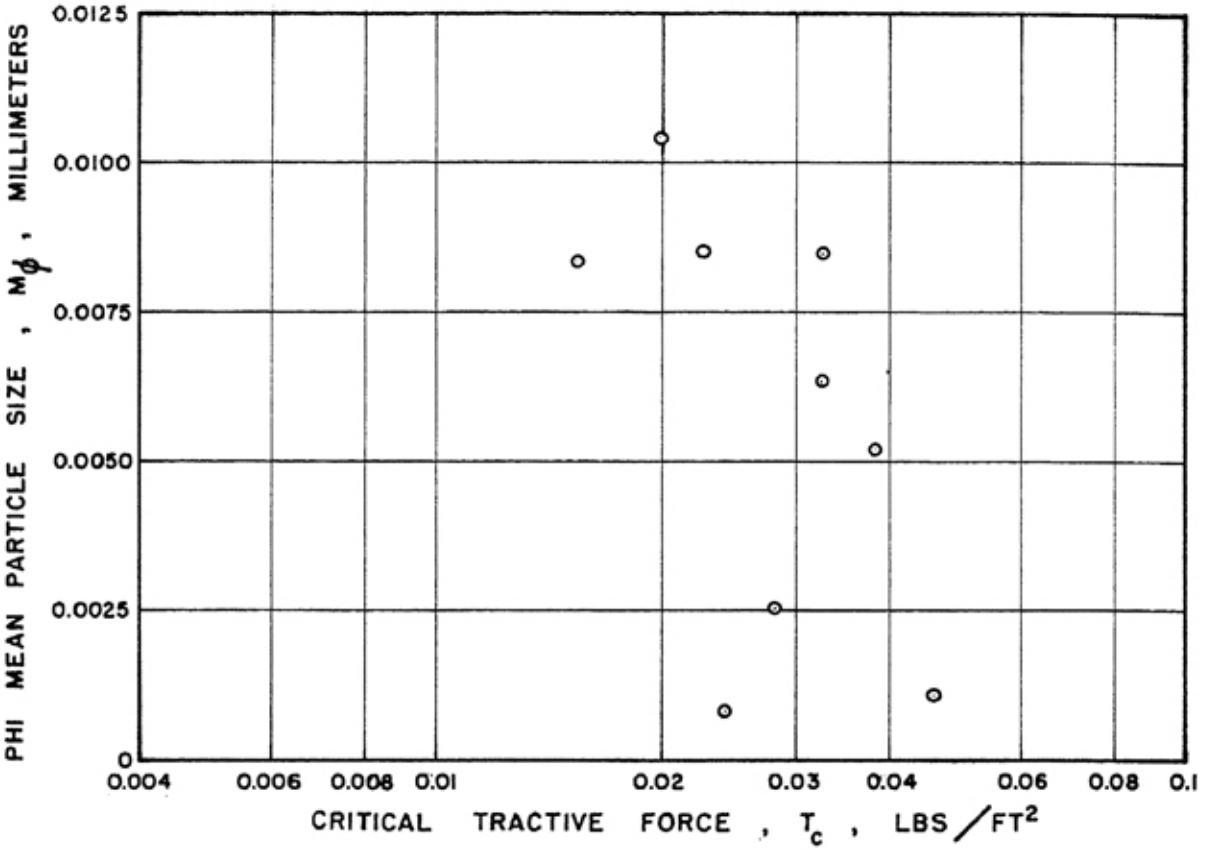

Fig. 16—Critical tractive force determined by equation (1) or (14) versus phi-mean particle size.

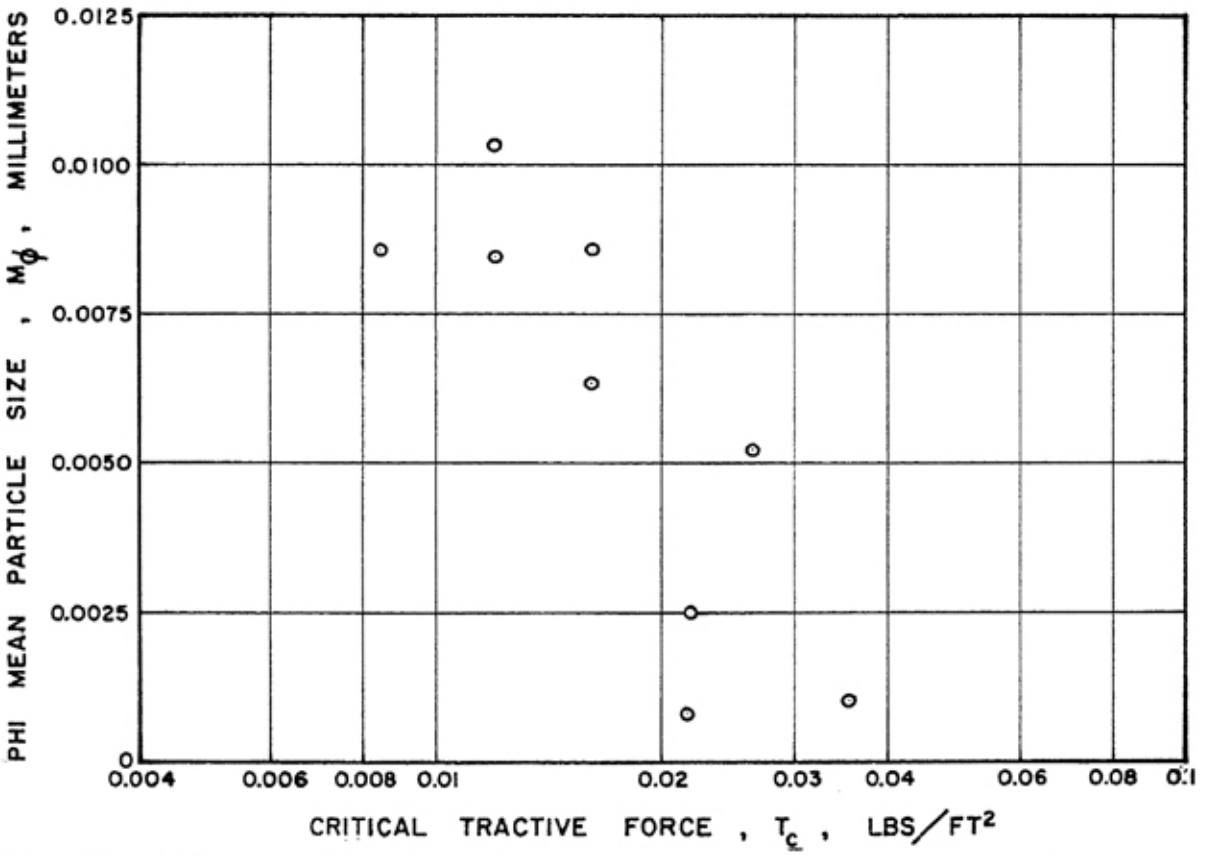

Fig. 17—Critical tractive force determined by equation (7) versus phi-mean particle size.

study, an attempt was made to hold the compaction of the bed material constant to better investigate the effect of soil cohesion on channel stability. The voids ratios, e, of the soils were measured from samples taken from the test section of the hydraulic flume after each test. These values varied from 1.23 to 1.84. Voids ratios this high correspond to a loosely compacted soil.

An attempt was made to explain in terms of the voids ratio, the scatter in the data presented thus far. However, the variation in the voids ratio of the soils was not sufficient to make this possible. To include the voids ratio as a third variable in equations 17 through 23, it would be necessary to test soils in which the voids ratio varied at least by a factor of 2 or 3.

Summary of Analyses.

The critical tractive force shows good correlation with the plasticity index, the dispersion ratio, the mean particle size, and the percent clay. The correlation is not so good between the critical tractive force and phi-mean particle size. In each case except the latter, the critical tractive force was related to the soil property by means of a regression equation. A summary of the results is given in Table 2. The table is divided according to the method of evaluating the critical tractive force.

Although there is not much difference in the correlations, the relationships of critical tractive force to the plasticity index or the dispersion ratio are considered more reliable than the others tested. This is because either the plasticity index or the dispersion ratio measure cohesion in a somewhat direct manner while the other soil properties deal only with particle size distributon, which is only an indirect index of cohesion. Furthermore, the values of critical tractive force determined from equation 1 or 14 are considered better than those determined by equation 7. Two reasons are given for this. First, the measurements involved in using equation 1 or 14 were more accurate than the velocity measurements used in equation 7. Secondly, the variables in equation 1 or 14, channel slope and depth of flow, are quantities used by designers of open channels. Therefore, an analysis based on these same variables could more logically be used in field design.

Scatter in Data.

Considerable scatter was observed in many of the graphic representations of the data reported in this section. Several factors are listed which may help explain this scatter.

Soil conditions when sample was taken. All the soil samples were taken in the early spring when the soil was dry enough for a truck to be moved into the field. However, the moisture content and the degree of aggregation of the soils varied considerably. The moisture content at the time of testing in the hydraulic flume was essentially the same, since the soils were wetted prior to each test. However, the degree of aggregation of the soil likely affected the tests, since

TABLE 2--SUMMARY OF ANALYSES

Variables	Correlation Coefficient, r	Level of Significance of r in per cent	Regression Equation	Standard Deviation from Regression, S_r
		T_c determined by equation (1) or (14)		
$\log_{10}(T_c)$ vs $\log_{10}(I_w)$	0.896	1	$T_c = 0.0034(I_w)^{0.84}$	0.111
$\log_{10}(T_c)$ vs $\log_{10}(D_r)$	-0.892	1	$T_c = 0.213(D_r)^{-0.63}$	0.103
$\log_{10}(T_c)$ vs M	-0.860	1	$T_c = 0.074 \times 10^{-28.1M}$	0.116
$\log_{10}(T_c)$ vs P_c	0.980	1	$T_c = 0.0103 \times 10^{0.0183P_c}$	0.046
$\log_{10}(T_c)$ vs M_ϕ	-0.508	18		
		T_c determined by equation (7)		
$\log_{10}(T_c)$ vs $\log_{10}(I_w)$	0.849	1	$T_c = 0.0022(I_w)^{0.82}$	0.131
$\log_{10}(T_c)$ vs $\log_{10}(D_r)$	-0.795	1	$T_c = 0.110(D_r)^{-0.57}$	0.146
$\log_{10}(T_c)$ vs M	-0.950	1	$T_c = 0.055 \times 10^{-33.9M}$	0.079
$\log_{10}(T_c)$ vs P_c	0.888	1	$T_c = 0.00645 \times 10^{0.0182P_c}$	0.114
$\log_{10}(T_c)$ vs M_ϕ	-0.782	2		

highly aggregated soils tended to erode as aggregates rather than by dispersing into smaller units during the erosion process. It is not known what effect the moisture content of the soils at sampling time had on the results.

Another factor which may have had an effect, was the severity of the winter prior to testing. The amount of alternate freezing and thawing that a soil is subjected to affects the stability of the soil aggregates. Therefore, since the soils were sampled from different parts of the state of Missouri and were exposed to different degrees of freezing and thawing, the climate of the previous winter may have been a factor.

Judgment of the observer. All determinations of bed failure were made by visual observations. In some cases the failure was not abrupt, but occurred as a gradual increase of the amount of movement. In these cases, the judgment of the observer was an important factor. To eliminate possible variation between observers, the same person observed the bed and determined the time of failure for each test.

CONCLUSIONS

The problem of the stability of open channels in cohesive soils can logically be approached on the basis of the tractive force theory. The effect of cohesion can be measured by physical tests of the soils and related to the critical tractive force.

For the soils tested, the critical tractive force is best correlated with the plasticity index and the dispersion ratio, although excellent correlation also exists with the mean particle size and the percent clay. However, the mean particle size and the percent clay do not measure cohesion directly and therefore, the correlation may not be so high when soils with clays of different properties are tested.

The critical tractive force can be determined by two independent methods. The results appear not to be the same, but a definite correlation exists between the values obtained by the two methods.

REFERENCES

1. American Society for Testing Materials Committee D-18. *Procedures for Testing Soils.* Philadelphia, Pennsylvania: American Society for Testing Materials, July, 1950.
2. Anderson, Henry W. "Physical Characteristics of Soils Related to Erosion," *Journal of Soil and Water Conservation,* Vol. 6, No. 3. July, 1951.
3. "A Permeability Technique for the Evaluation of Structural Stability." Unpublished mimeographed report, United States Department of Agriculture, Agricultural Research Service.
4. Beasley, R. P., and J. C. Wooley, *Farm Water Management for Erosion Control.* Columbia, Missouri: Lucas Brothers Publishers, 1957.

5. Carter, A. C. *Critical Tractive Forces on Channel Side Slopes.* United States Bureau of Reclamation, Hydraulics Laboratory Report No. Hyd-366. Denver, Colorado: February, 1953.
6. Chang, Y. L. "Laboratory Investigation of Flume Traction and Transportation," *Transactions of the American Society of Civil Engineers.* Vol. 104. 1939.
7. Einstein, Hans Albert. *The Bed-Load Function for Sediment Transportation in Open Channel Flows.* United States Department of Agriculture, Technical Bulletin No. 1026. September, 1950.
8. Etcheverry, B. A. *Irrigation Prtctice and Engineering.* New York: McGraw-Hill Book Company, Inc., 1915.
9. Frevert, Richard K., *et al. Soil and Water Conservation Engineering.* New York: John Wiley and Sons, Inc., 1955.
10. Gerdel, R. W. "Adaptation of the Hydrometer Method to Aggregate Analysis of Soils," *Journal of the American Society of Agronomy,* Vol. 30. 1938.
11. Harrold, L. L., and D. B. Krimgold. "Devices for Measuring Rates and Amounts of Runoff," *Soil Conservation Service TP-51.* July, 1943. Revised October, 1944.
12. Keulegan, Garbis H. "Laws of Turbulent Flow in Open Channels," *Journal of Research.* United States Bureau of Standards, Research Paper RP1151, Vol. 21. 1938.
13. Lane, E. W. *Progress Report on Results of Studies on Design of Stable Channels.* United States Bureau of Reclamation, Hydraulics Laboratory Report No. Hyd. 352. Denver, Colorado: June, 1952.
14. Lane, E. W. "Stable Channels," *Transactions of the American Society of Civil Engineers,* Vol. 120. 1955.
15. Lane, E. W. "The Importance of Fluvial Morphology in Hydraulic Engineering," *Proceedings of the American Society of Civil Engineers,* Vol. 81, Separate No. 745. 1955.
16. Lutz, J. Fulton. *The Physico-Chemical Properties of Soils Affecting Erosion.* Agricultural Experiment Station, Research Bulletin No. 212, University of Missouri. Columbia, Missouri: July, 1934.
17. Middleton, H. E. *Properties of Soils Which Influence Erosion.* United States Department of Agriculture, Technical Bulletin No. 178. March, 1930.
18. Otto, George H. "A Modified Logarithmic Probability Graph for the Interpretation of Mechanical Analyses of Sediments," *Journal of Sedimentary Petrology,* Vol. 9, No. 2. August, 1939.
19. Peele, T. C. "The Relation of Certain Physical Characteristics to the Erodability of Soils," *Soil Science Society of America Proceedings,* Vol. 11. 1937.
20. Rouse, Hunter, and J. W. Howe. *Basic Mechanics of Fluids.* New York: John Wiley and Sons, Inc., 1953.
21. Scobey, Fred C., and Samuel Fortier. "Permissible Canal Velocities," *Transactions of the American Society of Civil Engineerings,* Vol. 89. 1926.
22. Simons, Daryl B. *Theory and Design of Stable Channels in Alluvial Materials.* Department of Civil Engineering, Colorado State University. Fort Collins, Colorado: May, 1957.
23. Snedecor, George W. *Statistical Methods.* Fourth edition. Ames, Iowa: The Iowa State College Press, 1948.
24. Woodward, Sherman M., and Chesley J. Posey. *Hydraulics of Steady Flow in Open Channels.* Seventh printing. New York: John Wiley and Sons, Inc., 1958.
25. Yoder, R. E. "A Direct Method of Aggregate Analysis of Soils and a Study of the Physical Nature of Erosion Losses," *Journal of the American Society of Agronomy,* Vol. 28. 1936.