MOTORS instead of MUSCLES

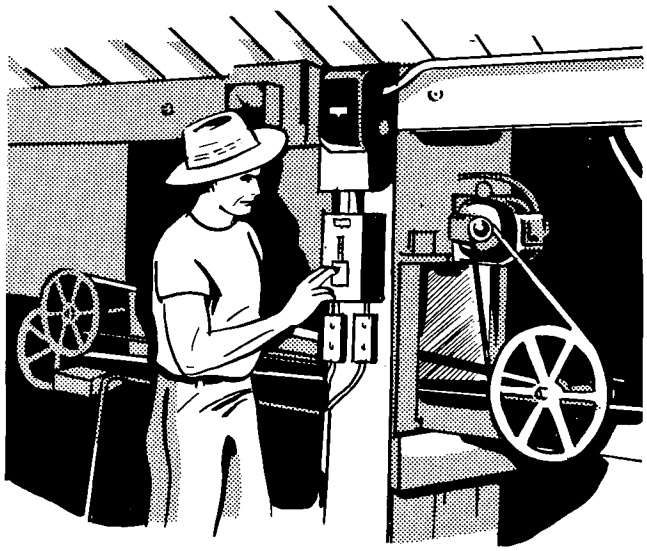

WHETHER you live on a farm or not, did you ever stop to think how much time and effort has been used just to move things from one place to another?

People who run factories and warehouses call this "materials handling." They long ago learned that if they were to be successful in this competitive world, they would have to handle materials as economically as possible. They found that, in most cases, they could not afford to move things using manpower.

Long before this, they had discovered that the processing of materials was something that human power could not do nearly as economically as mechanical power (and in many cases humans couldn't do it as well!).

Now, homemakers and farmers are finding that these same things are true--that they cannot afford to move and process with human power, if a practical way can be devised to do these things mechanically.

What to Do

1. Prove to yourself and others that it's good business to substitute motors for muscles where you can.

2. Make a survey of jobs around your home or farm that could use motors to replace muscles. Make a list of jobs that have already been mechanized.

3. On a piece of equipment driven with a V-belt, check the speed of the motor on the nameplate, and measure the diameters of the two pulleys. (CAUTION: make sure the motor will not start while you are measuring.) Figure the rpm at which the equipment is turning.

1. Why Use Motors?

If you do a job that an electric motor can do, do you know what kind of wages you are earning? Use these materials to help you figure your wages:

Three 8-inch concrete blocks
Truck bed or heavy table
Watch
Rule

One member of the group moves blocks from the floor to the truck bed or table as fast as he can for a 30-second period. His partner replaces the blocks on the floor. Another member keeps time with the watch.

At the end of the run, count the number of blocks lifted and record in the formula. Weigh one of the blocks or estimate its weight (average 40 lbs.) and record in the formula. Measure the height from the floor to the table or truck bed and record in feet.

Multiplying the number of blocks by the weight times the height in feet gives the number of foot-pounds of work done. Multiplying this by 2 gives the work done in one minute. Dividing by 33,000 results in the number of horsepower (hp) developed.

$$\frac{\text{(hp = foot-pounds per minute)}}{33{,}000}$$

$$\frac{\_\_\_\text{ blocks x }\_\_\_\text{ lbs. (wt./block) x }\_\_\_\text{ ft. (table height) x 2}}{33{,}000} = \_\_\_\text{ hp}$$

Your answer should be less than one hp, since a grown man cannot develop much over 1/10 hp for a very long period.

What would it cost to run a 1/10 hp motor for 10 hours with electricity selling at 2 cents per kilowatt-hour? (1 hp equals about 1,000 watts or 1 kilowatt)

There are other reasons for using motors instead of muscles:

Motors never get tired, as you probably did when you were lifting those concrete blocks from the floor to the table for just half a minute.

Motors are on duty 24 hours a day, with no extra pay for overtime or the night shift, or concern about holidays and vacations.

Motors will go into operation automatically whenever a sensing or timing device tells them to.

Motors can be remotely controlled, so that they can work where we would find it uncomfortable or dangerous.

2. What Motors Can Do

Electric motors can do thousands of jobs. Properly connected to the right kind of machines, they can move liquids, solids, and gases up, down, across, or just about any way we want to have them moved.

Motors can process, whether this be laundering clothes, stirring up a cake, lowering the temperature of milk, or washing fruit.

On our farms, materials handling with electric power is one of the greatest advances since the first tractor. Like tractors, however, electric motors must be carefully matched with the other equipment in the whole system. This is necessary so that one machine will not be underloaded, and perhaps the next one overloaded. As with anything, it pays to plan ahead.

What Kind of Motor?

There are several types of motors, and you should know which type to use for various jobs where single-phase electric service is available.

Split-phase motors are generally the least expensive, but their use is limited to jobs requiring from 1/4 to 1/3 horsepower, and which start easily.

Capacitor motors are designed for medium to hard starting loads, and they are available in sizes from 1/3 horsepower on up.

Repulsion-start motors are for very hard-starting jobs, from 1/2 hp on up.

The position in which your motor will work is important. Any motor will work in a horizontal position. If your job calls for tilted or vertical operation, your motor must have ball bearings to take care of the end thrust.

You should also know of the power requirements. You can get this by looking at similar equipment that was fitted with a motor by the maker.

The kind of housing your motor should have is determined by the environment where it is to work. Drip-proof (the most common) housings will keep out water that drips from above. Splash-proof housings will keep out water that might splash up from below. Totally enclosed motors will keep out all water and dirt. Explosion-proof motors will prevent a spark in the motor from igniting dust or fumes.

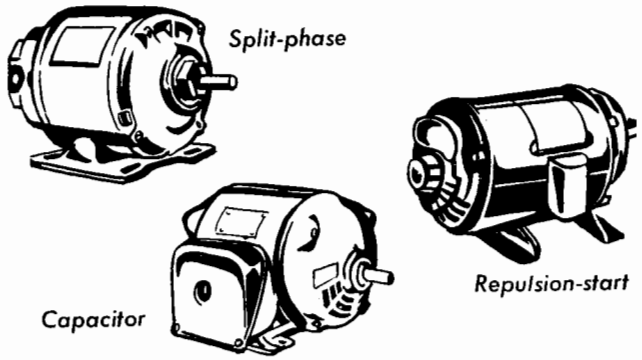

The voltage at which you will operate your motor depends usually on its size. Those a half horsepower or smaller are usually operated on 115 volts, and bigger motors on 230 volts. If you try to operate motors bigger than 1/2 hp on 115 volts, you may have trouble.

3. How to Put Motors to Work

You will need some kind of a drive mechanism to connect the motor to the machine you wish to operate. One kind is called the direct drive and another is the belt drive. Both are practical.

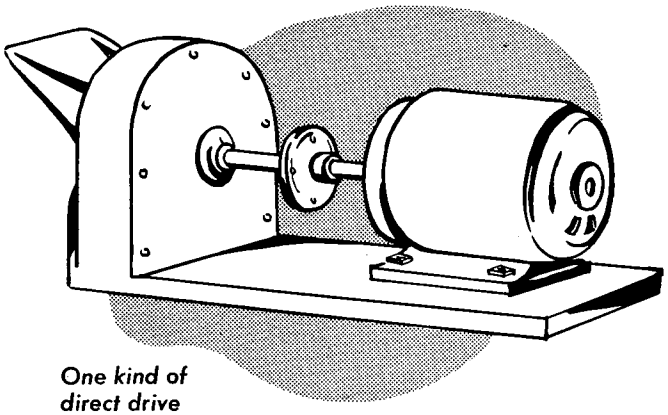

One kind of direct drive

The direct drive is not common, because it requires that the motor speed and the equipment speed be the same. Equipment such as vacuum cleaners, fans, and centrifugal pumps are often mounted directly on the motor shafts. Equipment that has separate bearings must have a flexible shaft or coupling between the motor and equipment shaft.

The most practical and popular drive is the V-belt and pulley. V-belts are easily installed and it's easy to get the speed you need. They also absorb shock and vibration, come in standard sizes, and almost never slip off the pulleys.

Use the Right V-Belts

V-belts and pulleys are made in various sizes. The pulley groove width should always match the belt width. Fractional-horsepower (often abbreviated FHP) belts are used for small motors equipped with pulleys that are 2-1/2 inches or less in diameter. A-section belts and pulleys are used for most farm jobs requiring 3/4 to 5 horsepower. Motor pulley size should be at least 3 inches in diameter. B-section belts and pulleys are used on 3 horsepower or larger motors. Here the motor pulley size should be 5-1/2 inches in diameter or larger.

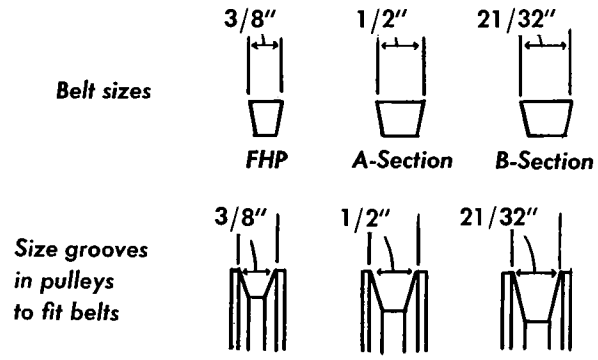

V-BELTS RECOMMENDED ACCORDING TO SIZE OF DRIVE PULLEY AND HORSEPOWER OF MOTOR.

Diam. Motor Pulley Inches	Number and Type of Belts Required Horsepower of 1750 RPM Motors							
	½	¾	1	1½	2	3	5	7½
2	1-A	2-A	X	X	X	X	X	X
2½	1-A	1-A	X	X	X	X	X	X
3	1-A	1-A	1-A	2-A	2-A	3-A	5-A	8-A
3½	1-A	1-A	1-A	2-A	2-A	3-A	4-A	7-A
4	1-A	1-A	1-A	1-A	2-A	2-A	3-A	5-A
4½	1-A	1-A	1-A	1-A	1-A	2-A	3-A	5-A
5	1-A	1-A	1-A	1-A	1-A	2-A	3-A	4-A
5½	1-A	1-A	1-A	1-A	1-A	1-B	2-B	3-B
6	1-A	1-A	1-A	1-A	1-A	1-B	2-B	2-B
7	1-A	1-A	1-A	1-A	1-A	1-B	2-B*	2-B
8	1-A	1-A	1-A	1-A	1-A	1-B*	1-B	2-B
9	1-A	1-A	1-A	1-A	1-A	1-B*	1-B	2-B

*Type A could be used instead of Type B.
X Pulleys less than 3 inches in diameter should not be used for motors 1 hp and larger.

To figure the proper length of a V-belt for a motor already mounted, measure the distance around the pulleys with a piece of string. See diagram.

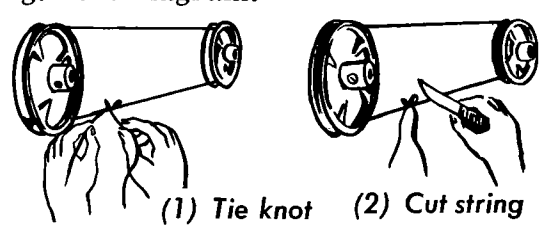

(1) Tie knot in string (2) Cut string (3) Measure string

If the motor does not have to be mounted in a certain place, the following formula will give you the length of belt that will be most efficient:

Add:

5. 6 x diameter of larger pulley, and 1. 6 x diameter of smaller pulley, to get the total length.

When you find the total length, buy the standard length belt that comes closest.

Pick the Right Pulleys

Most farm equipment does not operate at the same speed as its motor. For example, a hammer mill may require a speed of 3000 rpm; a tool grinder, 2000 rpm; a hay drying fan, 1150 rpm; and a feed auger a much lower rpm. To change the motor speed to the required equipment speed, you will need to use different size pulleys on the two shafts.

A simple way to figure proper pulley diameter is to use the formula:

Diameter of the driven pulley x rpm of the driven pulley = Diameter of the motor pulley x rpm of the motor pulley.

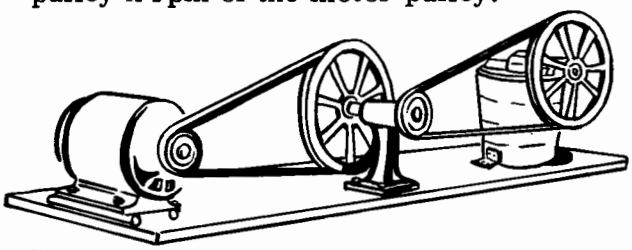

It is not always possible to obtain the correct speed with one set of pulleys. A speed reducer or jack shaft can then be used. You will then need to apply the pulley formula twice--between motor and jack shaft, then between jack shaft and machine. Sometimes a roller chain is used between the jack shaft and machine.

V-Flat Drive

In some instances, you will find it desirable to have a small V-pulley driving a large flat pulley. This is called a V-flat drive. Large V-pulleys are expensive and hard to obtain. This arrangement is particularly good if you are (1) running a machine that needs a pulley larger than 12 inches in diameter, and (2) are operating at 600 rpm or less. A standard V-belt is used that fits the V-pulley on the motor. If the distance center to center on the two pulleys is not greater than the diameter of the large pulley, very little slippage will occur.

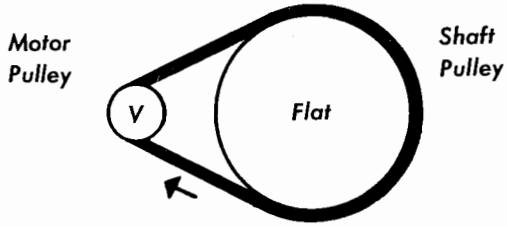

Tips for Good V-Belt Operation

1. Clean the pulleys—wipe out all oil, dirt, and grease.
2. Check pulley grooves—worn or bent pulleys wear out belts fast.
3. Release the take-up adjustment—do not "roll" a belt on a pulley.
4. Check pulley alignment. Use a straight edge against the two pulleys.

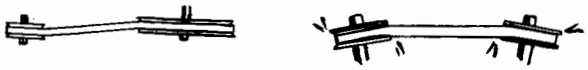

Pulleys out of line *Shafts out of line*

5. Get the right belt tension—neither too tight nor too loose. A good rule is to allow a 3/4 inch depression for each foot of distance between pulley shafts.

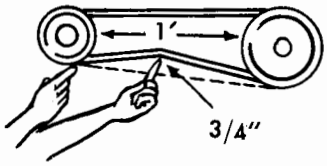

6. Always use "matched" belts in multiple drives.
7. Recheck the pulley alignment and belt tension periodically.
8. Never use a belt so worn that it rides the bottom of the groove.
9. Be sure the belt matches the pulley.
10. Try to have the bottom section of the belt do the pulling.

Demonstrations You Can Give

Show and tell about the three sizes of V-belts, and how to properly install a V-belt.

Issued in furtherance of cooperative extension work, acts of May 8 and June 30, 1914, in cooperation with the United States Department of Agriculture. C. B. Ratchford, Vice-President for Extension, Cooperative Extension Service, University of Missouri, Columbia, Mo. 65201.

University Libraries
University of Missouri

Digitization Information

Local identifier	ty173

Source information

Identifier	Cataloging pending
Format	Book
Content type	Text
Notes	Stamp in blue on front cover. Handwritten notes on cover in pencil and red ink.

Capture information

Date captured	2018 March
Scanner manufacturer	Ricoh
Scanner model	MP C4503
Scanning software	
Optical resolution	600 dpi
Color settings	grayscale and color
File types	tiff
Notes	

Derivatives - Access copy

Compression	
Editing software	Photoshop
Resolution	600 dpi
Color	grayscale and color
File types	tiff and pdf
Notes	