Term Name

Class Name

Yun Zhang College Physics 1 Problems - Newton's Laws Circular Motion and Gravitation

Name:

Date:

Section:

Question 1 (1 point)

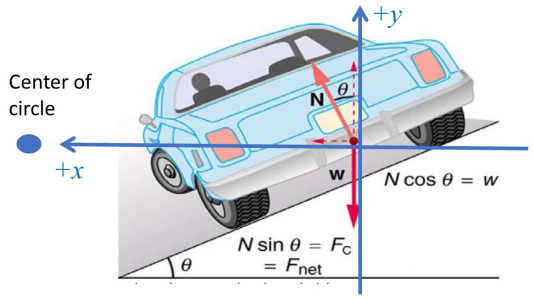

Circular Motion - Banked Curve

The above figure shows a car making a left turn on a **BANKED** curve without replying on friction. The force diagram is also shown.

The car has a mass of 1050.0 kg. The radius of the circular turn is 48.0 m. The angle of the bank θ = 24.0°

Keep 2 decimal p plcaes in all answers. Don't use scientific notation.)

Warning: formula tan(theta) = v^2/(rg) is NOT on Formula sheet, thus can't be used directly in exams. You should learn the entire analysis (force diagram, applying Newton's law).

Notice how to set up the +x and +y axes on a banked curve.

Take some time to work out the geometry.

In exams you must be able to draw force diagrams on your own.

Apply Newton's second Law $\sum F_y = ma_y$, (what is a_y?) obtain first equation.

(a) Find the magnitude (In Newtons) of the normal force on the car.

(b) What is the normal force's component (In Newtons) that points toward the center of the circle? This force is the centripetal force on a banked curve.

(c) Apply $\sum F_x = ma_x$, (what is a_x?) obtain second equation. Find the car's speed (in m/s).

(d) If the car's speed is increased to 20.47 m/s, on the same banked curve (same angle theta), what change will the car make?

a. The car stays at the same heigh on the curve with the same radius of circular motion
b. The car will move higher on the banked curve, with a larger radius of circular motion
c. The car will move lower on the banked curve, with a smaller radius of circular moton

What is the new radius (in meters)?

(e) If the radius must be fixed at 48.0 m, to accommodate the higher speed of 20.47 m/s,, what must be the new bank angle θ (in degrees)?

Hint: Combine the two equations you obtained from apllying Newton's Law , get rid of the normal force to get a new equation involving the angle theta, the speed and the radius. Solve for the angle theta.

Other situations similar to a banked curve: Airplane making a turn, a conical pendicum

Similar analysis

An airplane making a turn is similar to a banked curve

Identical force diagram as in banked curve
(replace normal force vector F_N in banked curve by lifting force vector L here).

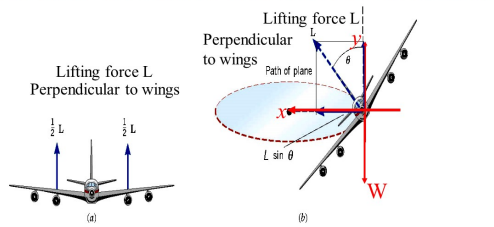

A conical pendulum is similar to a banked curve

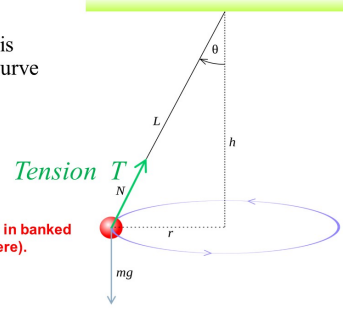

Identical force diagram
(replace normal force vector in banked curve by Tension vector T here).

Question 2 **(1 point)**

As shown in the figure, a 26.5 kg block is placed at rest on a rough floor. The coefficient of static friction between the block and the floor is μs = 0.7 and the coefficient of kinetic friction is μk = 0.58. Force F_1 is trying to pull the block to the right while force F_2 = 56 N tries to hold the block in place. Magnitude of F_1 is larger than magnitude of F_2.
Keep 2 decimal places in all answers.

Step 1: Start by drawing a **free body diagram** of the block, including all the forces exerted on the block. Label the normal force as F_N, label the weight as weight. Since the type of the frictional force is not clear yet, represent it by **vector f.**

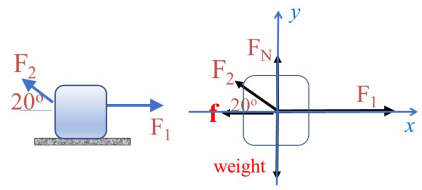

You should be able to calculate the weight of the block. Force F2 is given.
But the other 3 forces: the frictional force f, the force F1 and the normal force F_N are unknown.

For each force, write its x component and y component. (Use f, F1 and F_N as "space holder" for the unknowns)

Step 2: Apply NEwton's second law

Apply $\sum F_y = ma_y$, what should a_y be equal to?, obtain first equation.

(a) Solve for the magnitude (in Newtons) of the normal force FN, it is:
(b) Find the magnitude (in Newtons) of the maximum static friction.

Apply $\sum F_x = ma_x$, to this problem, obtain the second equation.

If the block is not moving yet, what is a_x? . no submission needed

(c) What is the smallest magnitude (in Newtons) of force F1 in order to make the block move to the right? (Hint: which force(s) or component(s) tries (try) to hold the block? Mistakes are commonly made.)
(d) If F1 = 208.19 N N, what is the type of the frictional force?

a. KINETIC
b. NO FRICTION
c. STATIC

(e) If F1 = 208.19 N N, What is the magnitude (in Newtons) of the friction force? (Note: mistakes are commonly made if concepts are not clear)
(f) If F1 = 234.19 N, what is the type of the frictional force?

a. KINETIC
b. STATIC

What is the magnitude (in Newtons) of the kinetic frictional force?

(g) If F1 = 234.19 N, Apply $\sum F_x = ma_x$, what is the acceleration (in m/s^2)of the block?

Question 3 **(1 point)**

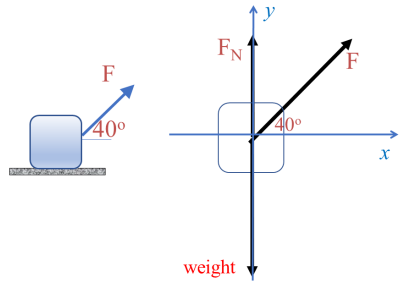

Pulling a Suitcase (NO friction)

As shown in the figure, a force F = 72 N above the horizontal is pulling a 25.5 kg suitcase to the right on a horizontal frictionless floor. (This is a side view). Keep 2 decimal places in all answers.

Step 1: Start by drawing a **free body diagram** of the suitcase, including all the forces exerted on the it. Label the normal force as F_N, label the weight as weight.
You should be able to calculate the weight of the suitcase . Force F is given.
But the normal force F_N is unknown.

For each force, write its x component and y component. (Use F_N as "space holder")

Step 2: Apply Newton's second law

Apply $\sum F_y = ma_y$, what should a_y be equal to, noticing that the suitcase doesn't move in the vertical direction at all ?, obtain an equation. involving the normal force F_N.

(a) Solve for the magnitude (in Newtons) of the normal force F_N, it is:

(b) Apply $\sum F_x = ma_x$, to calculate the acceleration (in m/s^2) of the suitcase.

Now the situation is varied, and you will solve the problem in a reversed order.

The new acceleration of the suitcase is desired to be 2.56 m/s^2. The mass of the suitcase is the same, 25.5 kg.

(c) What should be the magnitude (in Newtons) of the pulling force F?

(d) What is the magnitude (in Newtons) of the new normal force F_N?

Question 4 **(1 point)**

Horizontal Motion Block (with friction)

As shown in the figure, a 23 kg block is placed at rest on a rough floor. The coefficient of static friction between the block and the floor is μs = 0.4 and the coefficient of kinetic friction is μk = 0.28. Force F_1 is trying to pull the block to the right while force F_2 = 57 N tries to hold the block in place. Magnitude of F_1 is larger than magnitude of F_2.
Keep 2 decimal places in all answers.

Step 1: Start by drawing a **free body diagram** of the block, including all the forces exerted on the block. Label the normal force as F_N, label the weight as weight. Since the type of the frictional force is not clear yet, represent it by **vector f.**

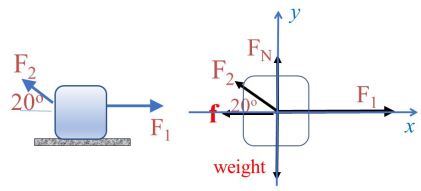

You should be able to calculate the weight of the block. Force F2 is given.
But the other 3 forces: the frictional force f, the force F1 and the normal force F_N are unknown.

For each force, write its x component and y component. (Use f, F1 and F_N as "space holder" for the unknowns)

Step 2: Apply NEwton's second law

Apply $\sum F_y = ma_y$, what should a_y be equal to?, obtain first equation.

(a) Solve for the magnitude (in Newtons) of the normal force FN, it is:

(b) Find the magnitude (in Newtons) of the maximum static friction.

Apply $\sum F_x = ma_x$, to this problem, obtain the second equation.

If the block is not moving yet, what is a_x? . no submission needed

(c) What is the smallest magnitude (in Newtons) of force F1 in order to make the block move to the right? (Hint: which force(s) or component(s) tries (try) to hold the block? Mistakes are commonly made.)

(d) If F1 = 121.02 N N, what is the type of the frictional force?

a. STATIC
b. NO FRICTION
c. KINETIC

(e) If F1 = 121.02 N N, What is the magnitude (in Newtons) of the friction force? (Note: mistakes are commonly made if concepts are not clear)

(f) If F1 = 151.02 N, what is the type of the frictional force?

a. KINETIC
b. STATIC

What is the magnitude (in Newtons) of the kinetic frictional force?

(g) If F1 = 151.02 N, Apply $\sum F_x = ma_x$, what is the acceleration (in m/s^2)of the block?

Question 5 **(1 point)**

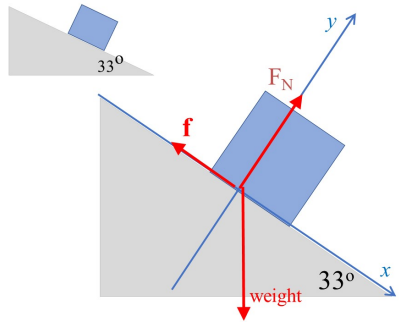

As shown in the figure, a 28.5 kg block is placed at rest on a rough incline. The coefficient of static friction between the block and the incline is μs = 0.82 and the coefficient of kinetic friction is μk = 0.70. The block may or may not slide down the incline.
Keep 2 decimal places in all answers.

Step 1: Start by drawing a **free body diagram** of the block, including all the forces exerted on the block. Label the normal force as FN, label the weight as weight. Since the type of the frictional force is not clear yet, represent it by **vector f.**
You should be able to calculate the weight of the block.
But the other 2 forces: the frictional force f and the normal force F_N are unknown.

For each force, write its x component and y component. (Use f and F_N as "space holder" for the unknowns). Pay attention to the geometry and trigonometrical functions.

Step 2: Apply NEwton's second law

Apply $\sum F_y = ma_y$, what should a_y be equal to?, obtain first equation.

(a) Solve for the magnitude (in Newtons) of the normal force FN, it is:
(b) Find the magnitude (in Newtons) of the maximum static friction.
To determine whether the block slides or not, you should compare the maximum static friction to which of the following forces?

a. y component of weight
b. x component of weight
c. magnitude of weight

(c) Does the block move? What is the type of the frictional force?

a. KINETIC
b. NO FRICTION
c. STATIC

Apply $\sum F_x = ma_x$, to this problem, obtain the second equation.

If the block is not moving yet, what is a_x? . no submission needed

(d) What is the magnitude (in Newtons) of the friction force? Note: mistake is commonly made if concept is not clear.
(e) To ensure the block slide on the incline, an external force **F** = 79 N parallel to the incline surface pulls the block, as shown in the figure below.

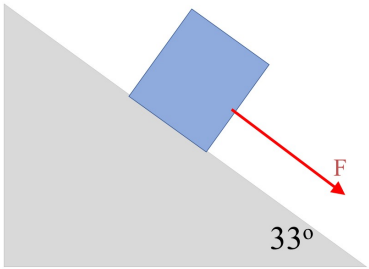

What is the magnitude (in Newtons) of the kinetic frictional force?

(f) Apply $\sum F_x = ma_x$, Under the new conditon, what is the acceleration (in m/s^2)of the block?

Question 6 **(1 point)**

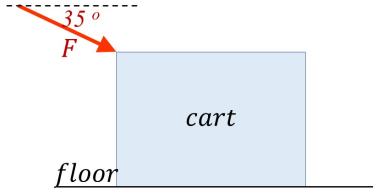

Cart is pushed - Constant Velocity

A person pushes a cart to the right by exerting a force $\vec{F}$ at a downward angle of 35° below the horizontal. The mass of the cart is 21.5 kg. The floor is **rough.** The cart is moving at **constant velocity to the right** on the floor.

Keep 2 decimal places in all answers.

How many forces (including the pushing force $\vec{F}$) are exerted on the cart?

a. 1
b. 2
c. 3
d. 4
e. 5
f. 6

Step 1: What are the other forces? For each force, identify its type and direction.
Draw a force diagram (Free body diagram) of the cart. Practice on your own. Refer to lecture examples or discussion problems. No submission.

Step 2: Apply Newton's second law,: $\vec{F}net$ = m $\vec{a}$. Notice that the **NET Force is the vector addition of ALL Forces.**

The component form of Newton's Second Law is more convenient here:

$\sum F_x = ma_x$, $\sum F_y = ma_y$,

What does "**Constant Velocity**" tell you about the acceleration? No submission.

The magnitude of the frictional force f = 64.00 N. The magnitude of the gravitational force on the cart (also named the weight of the cart) = mass x g.
But the magnitudes of the pushing force F and the normal force F_N are unknown.

For each force, write its x component and y component. (Use F and F_N as "space holder" for the unknowns)

Apply $\sum F_x = ma_x$, to this problem, obtain first equation.

Apply $\sum F_y = ma_y$, obtain second equation.

Step 3. Solve for the magnitudes of the pushing force F and the normal force F_N.
Keep 2 decimal places.

The magnitude of the pushing force F (in Newtons) is:
Look at the figure of this problem, before calculating the magnitude of the normal force F_N, determine whether the magnitude of F_N should be larger or smaller than, or equal to the weight of the cart?

a. Magnitude of normal force = weight of the cart

b. Magnitude of normal force > weight of the cart
c. Magnitude of normal force < weight of the cart

The magnitudes of the normal force F_N (in Newtons) is

Question 7 **(1 point)**

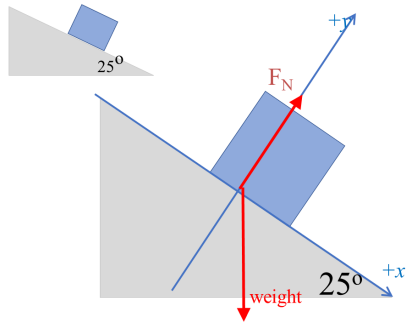

As shown in the figure, on a frictionless incline surface a 25 kg block slides down. Keep 2 decimal places in all answers.

Step 1: Start by drawing a **free body diagram** of the block, including all the forces exerted on the block. Label the normal force as F_N, label the weight as weight. **Pay attention to the direction of the normal force (perpendicular to the contact surface), and the direction of the weight (vertically downward).**
You should be able to calculate the weight of the block.

(a) What is the x component of the weight (in Newtons)? Pay attention to the geometry.

(b) What is the y component of the weight (in Newtons)? Pay attention to the geometry. Pay attention to the sign.
The normal force F_N is unknown. Using F_N as "space holder" , Write its x component and y component.

Step 2: Apply NEwton's second law

Apply $\sum F_y = ma_y$, what should a_y be equal to, since the block doesn't move in the y direction (perpendicular to the incline surface) at all? obtain an equation involving the normal force F_N.

(b) Solve for the magnitude (in Newtons)of the normal force F_N, it is:

(c) Apply $\sum F_x = ma_x$, to this problem, calculate the block's acceleration (in $m/s^{2)}$ down the incline.

Insight: For the acceleration down the inclne, does the mass of the block matter? You can retry this question for a different mass, and compare the acceleration to draw a conclusion. No submission.

Question 8 **(1 point)**

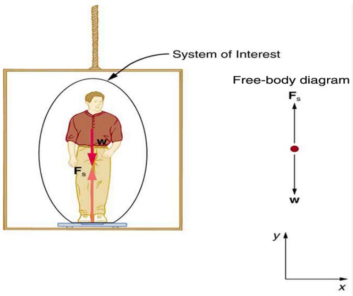

Apparent Weight - Scale in Elevator

As shown in the above figure a person stands on a scale in an elevator. The free-body diagram is also shown. Keep 2 decimal places in all answers.

(a) If the elevator is stationary, the scale reads 744 N. What is the mass (in kg) of the person?
Apply Newton's Second Law to this problem to obatin an equation.

Note: Fnet is a VECTOR addition of ALL forces on the person. Use the +y axis shown in the figure.

In the following situations, use what you learned in 1D kinematics (How the directions of velocity and acceleration relate to whether the object speeds up or slows down) to determine the direction of acceleration.

(b) What is the reading of the scale (in Newtons) if the elevator moves upward at a constant speed?

(c) What is the reading of the scale (in Newtons) if the elevator moves upwards and speeds up at a rate of 2.6 m/s^2?

(d) What is the reading of the scale (in Newtons) if the elevator moves upward but slows down at a rate of 3 m/s^2?

(e) What is the reading of the scale (in Newtons) if the elevator moves downward and speeds up at a rate of 2.9 m/s^2?

(f) What is the reading of the scale (in Newtons if the elevator moves downward but slows down at a rate of 2.2 m/s^2?

(g) What is the reading of the scale (in Newtons) if the elevator is in free fall (moving downward, speeding up at a rate of 9.8 m/s^2) ?

Note: Fnet is a VECTOR addition of ALL forces on the person.
(h) If the reading of the scale is 1097 N, what is the elevator's acceleration (in m/s^2) ? Include a correct sign.

(j) If the reading of the scale is 655 N, what is the elevator's acceleration (in m/s^2)? Include a correct sign.

Question 9 **(1 point)**

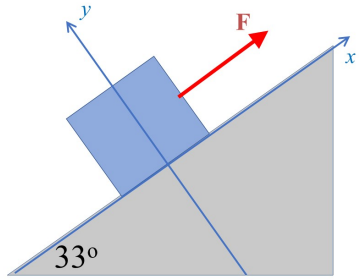

Pulling Up Incline - with Friction

As shown in the figure, a 26.5 kg block is being pulled by a force F up along a rough incline. The coefficient of kinetic friction between the block and the incline is μk = 0.30.
Keep 2 decimal places in all answers.

Step 1: Start by drawing a **free body diagram** of the block, including all the forces exerted on the block. Label the normal force as FN, label the weight as weight. Since the type of the frictional force is kinetic, represent it by vector fk
You should be able to calculate the weight of the block.
But the Force F and the normal force F_N , and kinetic friction fk are unknown.

For each force, write its x component and y component. (Use F and F_N as "space holder" for the unknowns). You can write fk from its formula. Pay attention to the geometry and trigonometrical functions.

Step 2: Apply NEwton's second law

Apply $\sum F_y = ma_y$, what should a_y be equal to?, obtain first equation.

(a) Solve for the magnitude (in Newtons) of the normal force FN, it is:
(b) What is the magnitude (in Newtons) of the kinetic frictional force?

Apply $\sum F_x = ma_x$, to this problem, obtain the second equation.

If the block is moving at constant velocity, what is a_x? no submission needed

(c) What is the magnitude (in Newtons) of force F in order to keep the block moving up the incline at a constant velocity?

(d) If force **F** is reduced to 102 N, Apply $\sum F_x = ma_x$, what is the acceleration (in $m/s^{2)}$ of the block? Pay attention to the sign.
foot note: the situation in (d) is possible: The block was initially pulled Up the incline by a large pulling force F, making it move at a constant velocity up the incline. Then the pulling force F is reduced. Since the block is already moving up the incline, it will continue to move up the incline but slows down.

Question 10 (1 point)

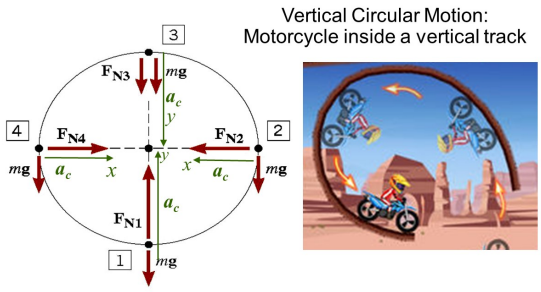

Vertical Circular Motions - Motorcycle Stunt

The above figures show a motorcycle moving inside a vertical circular track and the force diagrams when the motorcycle is at various locations on its path.

In exams you must be able to draw force diagrams on your own. Notice how to set up the +x or +y axis at various locations.

The motorcycle has a mass of 300.0 kg. The radius of the circular track is 40.0 m.
At the bottom of the track, its speed id 31.00 m/s.

Apply Newton's second Law $\sum F_y = ma_y$, (what is a_y?) obtain an equation.

(a) Find the magnitude (in Newtons) of the normal force on the motorcycle at the bottom of the track. (Don't use scientific notation.)
The motorcycle has a mass of 300.0 kg. The radius of the circular track is 40.0 m. At the TOP of the track, its speed id 25.00 m/s.

Apply Newton's second Law $\sum F_y = ma_y$, (what is a_y?) obtain an equation.

(b) Find the magnitude (in Newtons) of the normal force on the motorcycle at the top of the track. (Don't use scientific notation.)

(c) If the speed at the top is decreased, on the same circular track, how will the magnitude of the normal force change ?

a. The magnitude of the normal force decreases.
b. The magnitude of the normal force doesn't change.
c. The magnitude of the normal force increases.

At what speed (in m/s) at the top of the track will the magnitude of the normal force reach zero?
Other cases similar to the motorcycle inside a vertical circular track: a bead (or a water bucket) attached to a string is swirled vertically,
Similar force diagrams, similar analysis

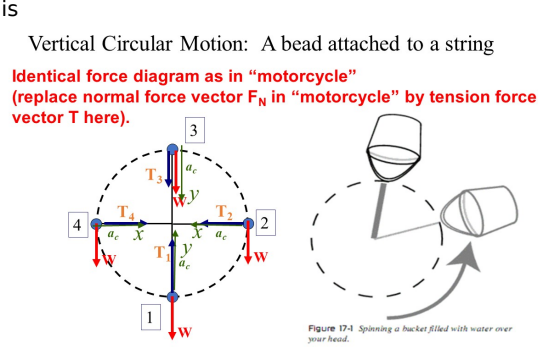

Question 11 **(1 point)**

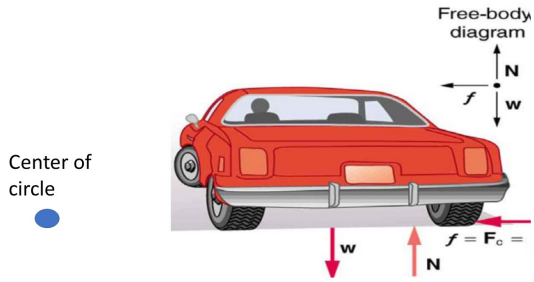

CIrcular Motion - Unbanked Curve

The above figure shows a car making a left turn on an **UNBANKED** (level ground) curve. The free-body diagram is also shown.
The car has a mass of 1140.0 kg. The radius of the circular turn is 59.0 m.

Warning: formula u_s= v^2/(rg) is NOT on Formula sheet, thus can't be used directly in exams. You should learn the entire analysis (force diagram, applying Newton's law).

(a) What is the magnitude (in Newtons) of the normal force on the car? **DON"T use scientific notation in answers.** Keep 2 decimal places.

(b) What is the Maximum Static frictional force (in Newtons) on the car exerted by the road? The coefficient of static friction between the road and car's tires is 0.55.

Apply $\sum F_x = ma_x$, **(what is a_x?)** obtain an equation.

(c) Solve for the speed limit (max speed) (in m/s) at which the car can still make a safe turn (without skidding).

(d) To be cautious the car is driving at 12.83 m/s. What is the car's centripetal acceleration (in m/s^2)?

(e) How much static frictional force (in Newtons) is exerted on the car at this speed? Warning: mistakes are commonly made if concepts are not clear.)

Question 12 **(1 point)**

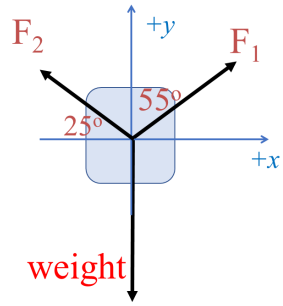

As shown in the figure, two forces F1 and F2 are lifting a heavy bucket v**ertically upward.** The mass of the bucket is 6 kg. The magnitude of F2 = 86 N.
Keep 2 decimal places in all answers.

(a) What is the magnitude of the weight of the bucket in Newtons?

What is the x-component (in Newtons) of force vector **F2**? Pay attention to its sign.
What is the y-component (in Newtons) of force vector **F2**?

(b) The bucket is lifted **vertially upward.** What should be the horizontal component of the acceleration, a_x? ? No submission.

Apply $\sum F_x = ma_x$, to this problem, obtain an equation involving magnitudes of F1. Solve for F1..It is

What is the y-component (in Newtons) of force vector **F1**?

Apply $\sum F_y = ma_y$, to this problem, find the acceleration a_y in m/s^2. It is

Question 13 (1 point)

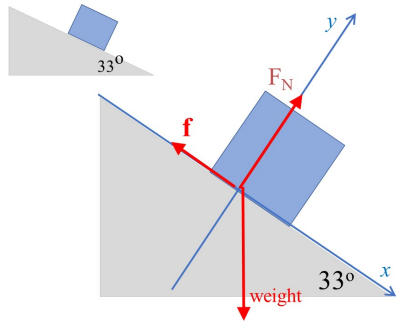

On (Down) an Incline - with Friction

As shown in the figure, a 25.5 kg block is placed at rest on a rough incline. The coefficient of static friction between the block and the incline is μs = 0.8 and the coefficient of kinetic friction is μk = 0.68. The block may or may not slide down the incline.
Keep 2 decimal places in all answers.

Step 1: Start by drawing a **free body diagram** of the block, including all the forces exerted on the block. Label the normal force as FN, label the weight as weight. Since the type of the frictional force is not clear yet, represent it by **vector f.**
You should be able to calculate the weight of the block.
But the other 2 forces: the frictional force f and the normal force F_N are unknown.

For each force, write its x component and y component. (Use f and F_N as "space holder" for the unknowns). Pay attention to the geometry and trigonometrical functions.

Step 2: Apply NEwton's second law

Apply $\sum F_y = ma_y$, what should a_y be equal to?, obtain first equation.

(a) Solve for the magnitude (in Newtons) of the normal force FN, it is:
(b) Find the magnitude (in Newtons) of the maximum static friction.
To determine whether the block slides or not, you should compare the maximum static friction to which of the following forces?

a. magnitude of weight
b. y component of weight
c. x component of weight

(c) Does the block move? What is the type of the frictional force?

a. KINETIC
b. STATIC
c. NO FRICTION

Apply $\sum F_x = ma_x$, to this problem, obtain the second equation.

If the block is not moving yet, what is a_x? . no submission needed

(d) What is the magnitude (in Newtons) of the friction force? Note: mistake is commonly made if concept is not clear.
(e) To ensure the block slide on the incline, an external force **F** = 67 N parallel to the incline surface pulls the block, as shown in the figure below.

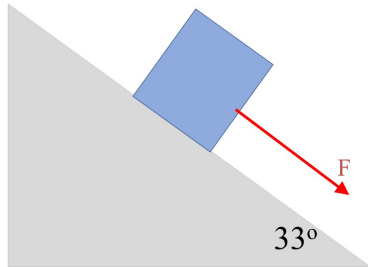

What is the magnitude (in Newtons) of the kinetic frictional force?

(f) Apply $\sum F_x = ma_x$, Under the new conditon, what is the acceleration (in m/s^2)of the block?

Question 14 **(1 point)**

Rotational Motion Basics (kinematics)

1. The turntable in a microwave oven rotates at a rate of 6.7 revolution per minute (RPM).
(a) What is its angular velocity in rad/s?

(b) If the radius is 15cm, what is the linear speed (also called tangential speed) of a point on the edge in m/s?

(c) What is the centripetal acceleration (in m/s^2) of the point in (b)?

2. *A fairground ride spins its occupants inside a flying saucer-shaped container. If the horizontal circular path the riders follow has an 8.00 m radius, (a) at what angular velocity (in rad/s) will the riders be subjected to a centripetal acceleration* 1.4 *times that due to gravity?*

(b) H*ow many revolutions per minute* is this angular velocity equivalent to?

(c) What is the magnitude of the centripetal force (in Newtons) on a 44.0 kg rider?

Question 15 **(1 point)**

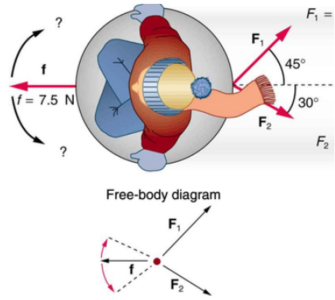

Newton's Laws - Two Dimensional Forces

The figure shows **from above** two children pulling a third child on a snow saucer sled exerting forces $\vec{F}1$ = 11.9 N and $\vec{F}2$ = 7.7 N. The total mass of the third child + sled system is 37.00 kg.

Note that though the direction of the frictional force $\vec{f}$ in the drawing is directed to the left, it is not exactly to the left, For the time being, its direction is not specified yet. After you find the direction of vector $\vec{R}$ = $\vec{F}1$ + $\vec{F}2$, the frictional force $\vec{f}$ will be opposite to the direction of vector $\vec{R}$

In this problem, the weight of the child + sled is balanced by the normal force on the child+ sled by the ground.

Set up the +x axis to the right, and +y axis to the top of the figure.
Keep 2 decimal places in all answers.

Calculate the x- and y- components of vector $\vec{F}1$, $F_{1x,}$ and $F_{1y.}$ No submission.

Calculate the x- and y- components of vector $\vec{F}2$, $F_{2x,}$ and $F_{2y.}$ No submission.

(a) Calculate the x component (in Newtons) of vector $\vec{R}$, Rx:

(b) Calculate the y component (in Newtons) of vector $\vec{R}$, Ry:

(c) Calculate the magnitude (in Newtons) of vector $\vec{R}$, R:

What is the direction of the vector $\vec{R}$?

The direction is represented by a **counterclockwise angle from the +*x*axis.**

Apply Newton's second law,: $\vec{F}net$ = m $\vec{a}$. Notice that the **NET Force is the vector addition of ALL Forces.** (In this problem, the weight of the child + sled is balanced by the normal force on the child+ sled by the ground. These two force vectors add up to zero. Therefore they don't contribute the Net Force vector)

The magnitude of the frictional force f = 7.5 N. The direction of the frictional force is opposite to the direction of vector $\vec{R}$.

(d) Calculate the magnitude (in Newtons) of the net force Fnet.

(e) Find the magnitude of the acceleration (in m/s^2) of the child + sled system.
What is the direction of the acceleration?
The direction is represented by a **counterclockwise angle from the +*x*axis.**

Question 16 **(1 point)**

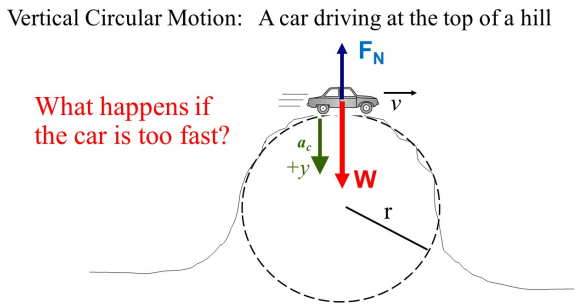

The above figures show a 900.0 kg car moving on the top of a hill and the force diagram. The shape of the hill can be approximated as part of a circle whose radius is 52.0 m. The car's speed is 22.00 m/s.

In exams you must be able to draw force diagrams on your own. Notice how to set up the +x or +y axis at various locations.

Apply Newton's second Law $\sum F_y = ma_y$, (what is a_y?) obtain an equation.

(a) Find the magnitude (in Newtons) of the normal force on the car. (Don't use scientific notation.)

(b) If the speed at the top is increased, on the same hill, how will the magnitude of the normal force change ?

a. The magnitude of the normal force decreases.
b. The magnitude of the normal force doesn't change.
c. The magnitude of the normal force increases.

At what speed (in m/s) at the top of the hill will the magnitude of the normal force reach zero?
What would happen if the car's speed exceeds the above value (where the normal force reaches aero)?

a. The car would loose contact with the hill, becoming airbone, and thus dangerous.
b. The car would safely drive over the hill.

Question 17 **(1 point)**

Gravitational Acceleration "g"

To find the gravitational acceleration "g" on the surface of a planet or satellite, imagine an object of mass m (which is not needed in the following calculations) is placed at the surface of the planet or satellite.

Write Newton's Unvisal Gravitaional force = weight

Write the formula for Universal Gravitational Force. The universal gravitation constant is 6.67×10^{-11} Nm^2/kg^2

Write the formula for weight.

Keep 2 decimal places in all answers. Don't use scientific notations.

(a) What is the "g", the acceleration due to gravity on the surface of the Moon?

The mass of the moon is 7.35 $\times$ 10^{22} kg, *its radius is 1.74* $\times 10^6$ m.

(b) On the surface of Mars? The mass of Mars is 6.418 $\times$ 10^{23} kg. *and its radius is 3.38* $\times 10^6$ m.

Question 18 **(1 point)**

To find the gravitational acceleration "g" on the surface of a planet or satellite, imagine an object of mass m (which is not needed in the following calculations) is placed at the surface of the planet or satellite.

Write Newton's Unvisal Gravitaional force = weight

Write the formula for Universal Gravitational Force. The universal gravitation constant is 6.67×10^{-11} Nm^2/kg^2

Write the formula for weight.

Keep 2 decimal places in all answers. Don't use scientific notations.

(a) What is the "g", the acceleration due to gravity on the surface of the Moon?

The mass of the moon is 7.35 $\times$ 10^{22} kg, *its radius is 1.74* $\times 10^6$ m.

(b) On the surface of Mars? The mass of Mars is 6.418 $\times$ 10^{23} kg. *and its radius is 3.38* $\times 10^6$ m.

Question 19 **(1 point)**

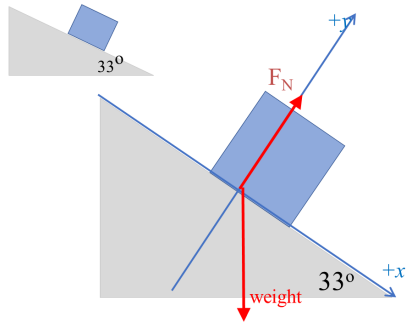

Down a 33 deg Incline (no friction)

As shown in the figure, on a frictionless incline surface a 26.5 kg block slides down. Keep 2 decimal places in all answers.

Step 1: Start by drawing a **free body diagram** of the block, including all the forces exerted on the block. Label the normal force as F_N, label the weight as weight. **Pay attention to the direction of the normal force (perpendicular to the contact surface), and the direction of the weight (vertically downward).**
You should be able to calculate the weight of the block.

(a) What is the x component of the weight (in Newtons)? Pay attention to the geometry.

(b) What is the y component of the weight (in Newtons)? Pay attention to the geometry. Pay attention to the sign.
The normal force F_N is unknown. Using F_N as "space holder" , Write its x component and y component.

Step 2: Apply NEwton's second law

Apply $\sum F_y = ma_y$, what should a_y be equal to, since the block doesn't move in the y direction (perpendicular to the incline surface) at all? obtain an equation involving the normal force F_N.

(b) Solve for the magnitude (in Newtons)of the normal force F_N, it is:

(c) Apply $\sum F_x = ma_x$, to this problem, calculate the block's acceleration (in $m/s^{2)}$ down the incline.

Insight: For the acceleration down the inclne, does the mass of the block matter? You can retry this question for a different mass, and compare the acceleration to draw a conclusion. No submission.

Question 20 **(1 point)**

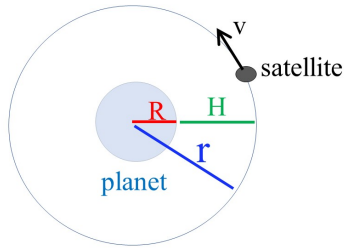

Circular Motion - Satellite Orbiting Around a Planet

The figure shows a satellite orbiting around a planet in a uniform circular motion.

To solve such problems, apply Newton's second law: F_{net} = ma
What is the force exerted on the satellite by the planet? Write its formula.
What is the acceleration in a uniform circular motion? write its formula
Obtain an equation. The Universal Gravitation constant is G = 6.67x10^-11 Nm^2/kg^2

*The mass of a planet is 3.30x10^23 kg its radius is R =*7.00x10^6 m
An imaginary satellite orbits around this planet at a height (above the surface of the planet) H = 1.70x10^7 m.

Pay attention to the radius of ORBIT r. (Don't use scientific notation.)

(a) What is the satellite's speed (in m/s) ?

(b) What is the period (**in days**) of the satellite's motion? 1 day = 24 hours, 1 hour = 3600 seconds

Period is the time to complete one round = distance of one round /speed , $T = \frac{2\pi r}{v}$

A second satellite orbits around this planet at a speed of 950 m/s on a different orbit.

(c) What is its radius of orbit r (in **km**)?

(d) What is the second satellite's height (in **km)** above the surface of the planet?

Question 21 **(1 point)**

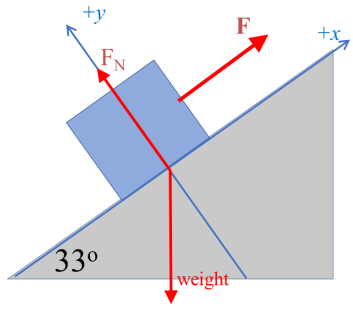

Pulling up on an Incline (no friction)

As shown in the figure, on a frictionless incline surface a 8 kg block is being pulled up by a force F = 67 N. Keep 2 decimal places in all answers.

Step 1: Start by drawing a **free body diagram** of the block, including all the forces exerted on the block. Label the normal force as F_N, label the weight as weight. **Pay attention to the direction of the normal force (perpendicular to the contact surface), and the direction of the weight (vertically downward).**
You should be able to calculate the weight of the block.

(a) What is the x component of the weight (in Newtons)? Pay attention to the geometry. Pay attention to its sign.

(b) What is the y component of the weight (in Newtons)? Pay attention to the geometry. Pay attention to the sign.
The normal force F_N is unknown. Using F_N as "space holder" , Write its x component and y component.

Step 2: Apply NEwton's second law

Apply $\sum F_y = ma_y$, what should a_y be equal to since the block doesn't move in the y direction (perpendicular to the incline surface) at all? obtain an equation involving the normal force F_N.

(b) Solve for the magnitude (in Newtons)of the normal force F_N, it is:

(c) Apply $\sum F_x = ma_x$, to this problem, calculate the block's acceleration (in $m/s^{2)}$ UP the incline.

Question 22 **(1 point)**

Problem 3 Pulling up incline with friction, Power

3A

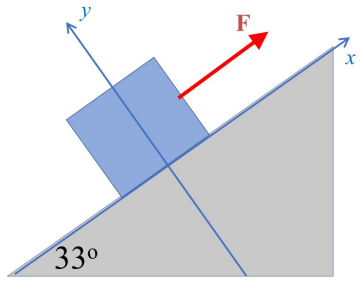

As shown in the above figure, a 6 kg block is being pulled by a force **F** up along a rough incline with an acceleration of 1.50 m/s² (the direction of acceleration is up the incline). The direction of the force F is parallel to the incline surface. The coefficient of kinetic friction between the block and the incline is μk = 0.30.

Keep 2 decimal places in all answers.
(a) Find the magnitude (in Newtons) of the normal force exerted on the block by the incline.
(b) What is the magnitude (in Newtons) of the kinetic frictional force?
(c) What is the magnitude (in Newtons) of force F to pull the block up the incline with an acceleration of 1.50 m/s²?
(d) When the block reaches a speed of 5.6 m/s, it is desired to keep the block moving at this constant velocity. What should be the new magnitude of force **F**?
(e) What is the power output by the new force F in (d)?

3B

From rest, a battery-driven toy car with a mass of 2 kg accelerates on a frictionless horizontal surface to reach a speed of 20.0 m/s in 16.0 s. Find the power output of the toy car's engine. Keep 2 decimal places.

Question 23 **(1 point)**

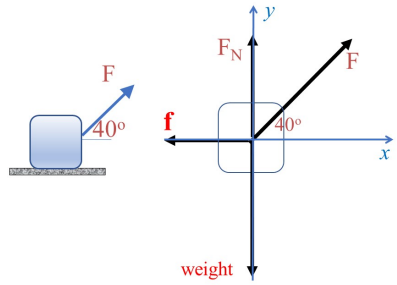

Pulling on Suitcase - with Friction

This problem has similarity to a discussion problem.

As shown in the figure, a 29.5 kg block is placed at rest on a rough floor. The coefficient of static friction between the block and the floor is μs = 0.65 and the coefficient of kinetic friction is μk = 0.53. Force F = 62 N is trying to pull the block to the right

Step 1: Start by drawing a **free body diagram** of the block, including all the forces exerted on the block. Label the normal force as FN, label the weight as weight. Since the type of the frictional force is not clear yet, represent it by **vector f.**
You should be able to calculate the weight of the block. Force F is given.
But the other 2 forces: the frictional force f and the normal force F_N are unknown.

For each force, write its x component and y component. (Use f and F_N as "space holder" for the unknowns)

Step 2: Apply NEwton's second law

Apply $\sum F_y = ma_y$, what should a_y be equal to?, obtain first equation.

(a) Solve for the magnitude (in Newtons) of the normal force FN (in Newtons), it is:
(b) Find the magnitude (in Newtons) of the maximum static friction (in Newtons) .
(c) Does the block move? What is the type of the frictional force?

a. NO FRICTION
b. KINETIC
c. STATIC

Apply $\sum F_x = ma_x$, to this problem, obtain the second equation.

If the block is not moving yet, what is a_x? . no submission needed

(d) What is the magnitude (in Newtons) of the friction force (in Newtons) ? Warning: mistakes are commonly made.
(e) If some lubricant is applied to the bottom of the block, the coefficient of static friction is reduced to 0.15 and the coefficient of kinetic friction is reduced to 0.10. Under the same applied force **F =** 62 N as above, the block will be sliding. Does the lubricant affect the normal force in this problem? No submission.

What is the magnitude (in Newtons) of the kinetic frictional force (in Newtons) ?

(f) Apply $\sum F_x = ma_x$, Under the ne conditons, what is the acceleration (in m/s^2) of the block?